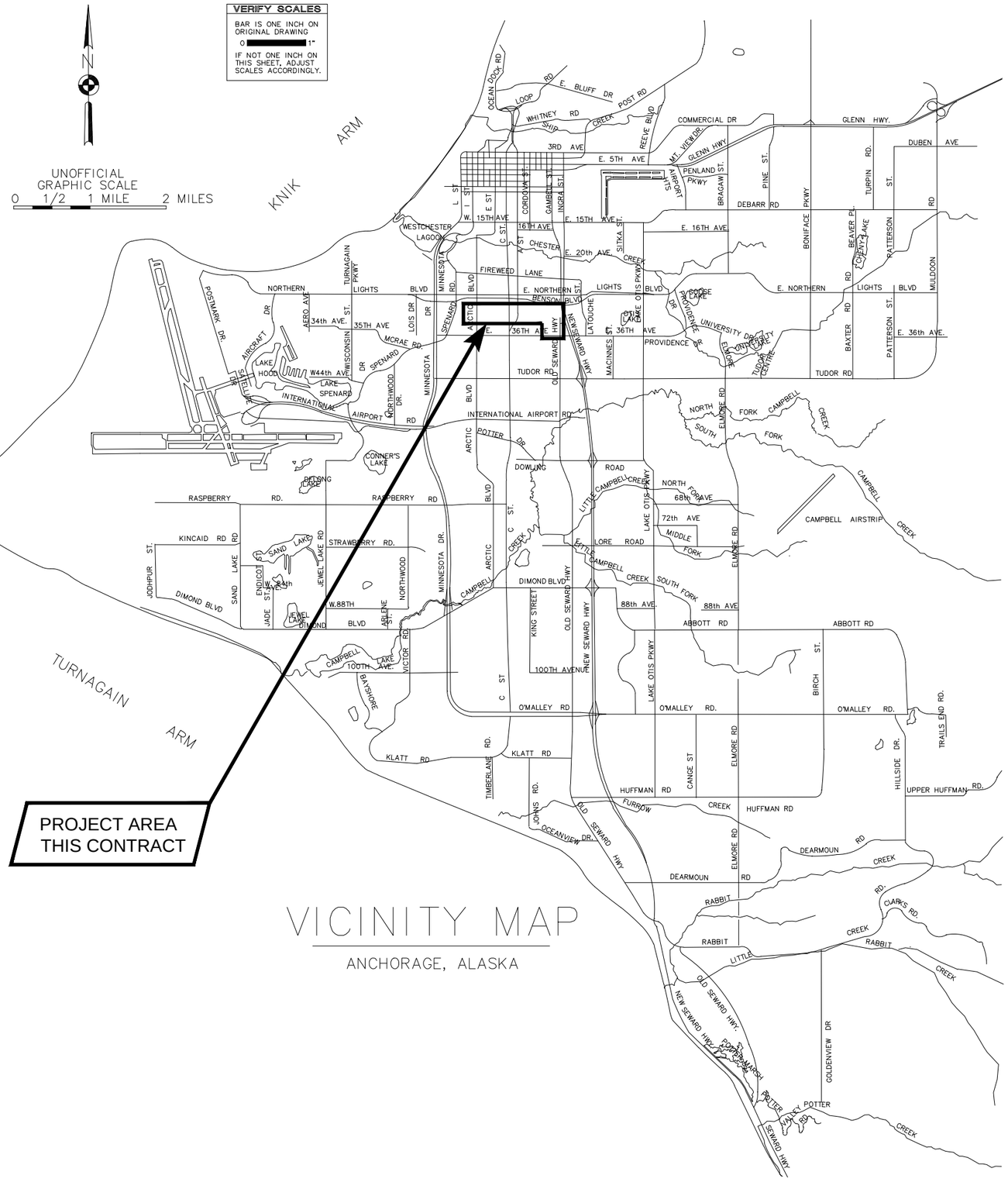


VICINITY MAP

ANCHORAGE, ALASKA

# MUNICIPALITY OF ANCHORAGE

## PROJECT MANAGEMENT AND ENGINEERING DEPARTMENT

## W. 32ND AVENUE & E. 33RD AVENUE UPGRADES ARCTIC BOULEVARD TO OLD SEWARD HIGHWAY

## PROJECT NUMBER: 16-29
## JANUARY 2020

## 65% DESIGN

## Volume 1 of 2

PREPARED BY:

CRW ENGINEERING GROUP, LLC
3940 ARCTIC BLVD. SUITE 300
ANCHORAGE, ALASKA 99503
PHONE: (907) 562-3252
#AECL882-AK

APPROVED BY:

KENT KOHLHASE, P.E.
MUNICIPAL ENGINEER

## SHEET INDEX

| SHEET NO. | DESCRIPTION | WORK SCHEDULE |
|---|---|---|
| GENERAL | | |
| G1 | COVER | ALL |
| G2 | INDEX | ALL |
| G3 | INDEX | ALL |
| G4 | GENERAL NOTES | ALL |
| G5 | LEGEND AND ABBREVIATIONS | ALL |
| G6 | KEY MAP | ALL |
| SURVEY | | |
| V1 | SURVEY CONTROL – W. 32ND AVENUE BOP TO STA 110+50 | ALL |
| V2 | SURVEY CONTROL – W. 32ND AVENUE STA 110+50 TO STA 125+50 | ALL |
| V3 | SURVEY CONTROL – CALAIS DRIVE STA 125+50 TO STA 141+00 | ALL |
| V4 | SURVEY CONTROL – E. 33RD AVENUE STA 141+00 TO EOP | ALL |
| V5 | SURVEY CONTROL – E. 34TH AVENUE STA 399+00 TO 404+89.37 | ALL |
| DEMOLITION | | |
| B1 | DEMOLTION PLAN – W. 32ND AVENUE ARCTIC BLVD TO STA 106+00 | ALL |
| B2 | DEMOLTION PLAN – W. 32ND AVENUE STA 106+00 TO STA 113+50 | ALL |
| B3 | DEMOLTION PLAN – W. 32ND AVENUE STA 113+50 TO STA 121+00 | ALL |
| B4 | DEMOLTION PLAN – W. 32ND AVENUE/CALAIS DRIVE STA 121+00 TO STA 129+00 | ALL |
| B5 | DEMOLTION PLAN – CALAIS DRIVE STA 129+00 TO STA 132+50 | ALL |
| B6 | DEMOLTION PLAN – CALAIS DRIVE STA 132+50 TO STA 140+00 | ALL |
| B7 | DEMOLTION PLAN – E. 33RD AVENUE STA 140+00 TO STA 147+50 | ALL |
| B8 | DEMOLTION PLAN – E. 33RD AVENUE STA 147+50 TO STA OLD SEWARD HWY | ALL |
| B9 | DEMOLTION PLAN – FAIRBANKS STREET | ALL |
| B10 | DEMOLTION PLAN – E. 34TH AVENUE | ALL |
| B11 | DEMOLTION SUMMARY TABLES | ALL |
| B12 | DEMOLTION SUMMARY TABLES | ALL |
| B13 | DEMOLTION SUMMARY TABLES | ALL |
| B14 | DEMOLTION SUMMARY TABLES | ALL |
| B15 | DEMOLTION SUMMARY TABLES | ALL |
| B16 | DEMOLTION SUMMARY TABLES | ALL |
| B17 | DEMOLTION SUMMARY TABLES | ALL |
| TYPICAL SECTIONS | | |
| C1 | TYPICAL SECTIONS – W. 32ND AVENUE/CALAIS DRIVE/ E. 33RD AVENUE | SCHED A |
| C2 | TYPICAL SECTIONS – W. 32ND AVENUE | SCHED A |
| C3 | TYPICAL SECTIONS – W. 32ND AVENUE | SCHED A |
| C4 | TYPICAL SECTIONS – W. 32ND AVENUE/CALAIS DRIVE | SCHED A |
| C5 | TYPICAL SECTIONS – CALAIS DRIVE ROUNDABOUT | SCHED A |
| C6 | TYPICAL SECTIONS – E. 33RD AVENUE | SCHED A |
| C7 | TYPICAL SECTIONS – PATHWAY & SIDE STREETS | SCHED A |
| C8 | TYPICAL SECTIONS – DRIVEWAYS & DETAILS | SCHED A |
| ROADWAY | | |
| R1 | ROADWAY PLAN AND PROFILE – W. 32ND AVENUE BOP TO STA 106+00 | SCHED A |
| R2 | ROADWAY PLAN AND PROFILE – W. 32ND AVENUE STA 106+00 TO STA 114+00 | SCHED A |
| R3 | ROADWAY PLAN AND PROFILE – W. 32ND AVENUE STA 114+00 TO STA 121+00 | SCHED A |
| R4 | ROADWAY PLAN AND PROFILE – W. 32ND AVENUE/CALAIS DRIVE STA 121+00 TO STA 129+00 | SCHED A |
| R5 | ROADWAY PLAN AND PROFILE – CALAIS DRIVE STA 129+00 TO STA 133+00 | SCHED A |
| R6 | ROADWAY PLAN AND PROFILE – CALAIS DR – STA 133+00 TO STA 140+00 | SCHED A |
| R7 | ROADWAY PLAN AND PROFILE – E. 33RD AVE – STA 140+00 TO STA 147+00 | SCHED A |
| R8 | ROADWAY PLAN AND PROFILE – E. 33RD AVENUE STA 147+00 TO EOP | SCHED A |
| R9 | ROADWAY PLAN AND PROFILE – FAIRBANKS STREET STA 300+00 TO 304+49.87 | SCHED A |
| R10 | ROADWAY PLAN AND PROFILE – E. 34TH AVENUE STA 399+48.44 TO EOP | SCHED A |
| R11 | ROADWAY PLAN AND PROFILE – BERING STREET & CHEECHAKO STREET | SCHED A |
| R12 | ROADWAY PLAN AND PROFILE – DAWSON STREET & EUREKA STREET | SCHED A |
| R13 | ROADWAY PLAN AND PROFILE – EIDE STREET & C STREET | SCHED A |
| R14 | ROADWAY PLAN AND PROFILE – A STREET & WALMART DRIVEWAY | SCHED A |
| R15 | ROADWAY PLAN AND PROFILE – MIDTOWN PLACE, DENALI STREET, EAGLE STREET | SCHED A |
| R16 | INTERSECTION LAYOUT – ARCTIC BOULEVARD | SCHED A |
| R17 | INTERSECTION LAYOUT – BERING STREET | SCHED A |
| R18 | INTERSECTION LAYOUT – CHEECHAKO STREET | SCHED A |
| R19 | INTERSECTION LAYOUT – DAWSON STREET | SCHED A |
| R20 | INTERSECTION LAYOUT – EUREKA STREET | SCHED A |

Volume 1

## SHEET INDEX

| SHEET NO. | DESCRIPTION | WORK SCHEDULE |
|---|---|---|
| R21 | INTERSECTION LAYOUT – EIDE STREET | SCHED A |
| R22 | INTERSECTION LAYOUT – C STREET | SCHED A |
| R23 | INTERSECTION LAYOUT – C STREET | SCHED A |
| R24 | INTERSECTION LAYOUT – A STREET | SCHED A |
| R25 | INTERSECTION LAYOUT – A STREET | SCHED A |
| R26 | INTERSECTION LAYOUT – PARCEL 115 | SCHED A |
| R27 | INTERSECTION LAYOUT – PARCEL 115 | SCHED A |
| R28 | INTERSECTION LAYOUT – MIDTOWN PLACE | SCHED A |
| R29 | INTERSECTION LAYOUT – DENALI STREET | SCHED A |
| R30 | INTERSECTION LAYOUT – DENALI STREET | SCHED A |
| R31 | INTERSECTION LAYOUT – DENALI STREET | SCHED A |
| R32 | INTERSECTION LAYOUT – EAGLE STREET | SCHED A |
| R33 | INTERSECTION LAYOUT – E. 33RD AVENUE & FAIRBANKS STREET | SCHED A |
| R34 | INTERSECTION LAYOUT – E. 33RD AVENUE & OLD SEWARD HIGHWAY | SCHED A |
| R35 | INTERSECTION LAYOUT – E. 34TH AVENUE & FAIRBANKS STREET | SCHED A |
| R36 | INTERSECTION LAYOUT – E. 34TH AVENUE & OLD SEWARD HIGHWAY | SCHED A |
| R37 | PATHWAY PLAN AND PROFILE – E. 34TH AVENUE TO E. 36TH AVENUE | SCHED A |
| SUMMARY TABLES | | |
| T1 | ROADWAY SUMMARY TABLES | SCHED A |
| T2 | ROADWAY SUMMARY TABLES | SCHED A |
| T3 | ROADWAY SUMMARY TABLES | SCHED A |
| T4 | ROADWAY SUMMARY TABLES | SCHED A |
| T5 | ROADWAY SUMMARY TABLES | SCHED A |
| T6 | ROADWAY SUMMARY TABLES | SCHED A |
| T7 | ROADWAY SUMMARY TABLES | SCHED A |
| T8 | ROADWAY SUMMARY TABLES | SCHED A |
| T9 | ROADWAY SUMMARY TABLES | SCHED A |
| ROADWAY DETAILS | | |
| D1 | ROADWAY DETAILS – CURB RAMPS | SCHED A |
| D2 | ROADWAY DETAILS – CURB RAMPS | SCHED A |
| D3 | ROADWAY DETAILS – CURB RAMP, PROTECTED BIKE LANE TRANSITION & DRIVEWAY APPROACH | SCHED A |
| D4 | ROADWAY DETAILS – DRIVEWAYS | SCHED A |
| D5 | ROADWAY DETAILS – MISCELLANEOUS DETAILS | SCHED A |
| D6 | ROADWAY DETAILS – MISCELLANEOUS DETAILS | SCHED A |
| D7 | ROADWAY DETAILS – HIGH–PERFORMANCE CONCRETE | SCHED A |
| RETAINING WALL | | |
| RW1 | RETAINING WALL DETAILS – TYPE 1 & 2 SECTIONS | SCHED A |
| RW2 | RETAINING WALL DETAILS – TYPE 3 & 4 SECTIONS | SCHED A |
| RW3 | RETAINING WALL DETAILS – TYPE 1 & 2 VERTICAL JOINTS PLAN VIEW | SCHED A |
| RW4 | RETAINING WALL DETAILS – TRANSITION DETAIL | SCHED A |
| SIGNING & STRIPING | | |
| S1 | SIGNING & STRIPING PLAN – W. 32ND AVENUE BOP TO STA 105+00 | SCHED A |
| S2 | SIGNING & STRIPING PLAN – W. 32ND AVENUE STA 105+00 TO STA 117+00 | SCHED A |
| S3 | SIGNING & STRIPING PLAN – W. 32ND AVENUE/CALAIS DRIVE STA 117+00 TO STA 128+50 | SCHED A |
| S4 | SIGNING & STRIPING PLAN – CALAIS DRIVE STA 128+50 TO STA 137+50 | SCHED A |
| S5 | SIGNING & STRIPING PLAN – E. 33RD AVENUE STA 137+50 TO STA 148+50 | SCHED A |
| S6 | SIGNING & STRIPING PLAN – E. 33RD AVENUE STA 148+50 TO EOP & FAIRBANKS STREET | SCHED A |
| S7 | SIGNING & STRIPING PLAN – E. 34TH AVENUE & PATHWAY | SCHED A |
| S8 | BIKE LANE MARKING DETAILS | SCHED A |
| S9 | SIGN SCHEDULE SUMMARY | SCHED A |
| S10 | SIGN SCHEDULE SUMMARY | SCHED A |
| S11 | SIGN SCHEDULE SUMMARY | SCHED A |
| S12 | SIGN SCHEDULE SUMMARY | SCHED A |
| S13 | SIGN SCHEDULE SUMMARY | SCHED A |

Volume 1

Volume 2

**RECORD DRAWING**

1. DATA PROVIDED BY: _____ TITLE: _____
   THIS WILL SERVE TO CERTIFY THAT THESE RECORD DRAWINGS ARE A TRUE AND ACCURATE REPRESENTATION OF THE PROJECT AS CONSTRUCTED.
   CONTRACTOR: _____
   BY: _____ TITLE: _____ DATE: _____
2. DATA TRANSFERRED BY: _____ TITLE: _____
   COMPANY: _____ DATE: _____
3. BASED ON PERIODIC FIELD OBSERVATIONS BY THE ENGINEER (OR AN INDIVIDUAL UNDER HIS/HER DIRECT SUPERVISION), THE CONTRACTOR–PROVIDED DATA APPEARS TO REPRESENT THE PROJECT AS CONSTRUCTED.
   DATA TRANSFER CHECKED BY: _____ TITLE: _____
   COMPANY: _____ DATE: _____
   BY: _____

| DATA | DRAWN BY | CHECKED BY |
|---|---|---|
| BASE | TS | MJ |
| TOPOGRAPHY | BW | BW |
| PROFILE | AA | JK |
| STORM SEWER | MV | JH |
| WATER/SANITARY SEWER | CB | JK |
| GAS | CB | JK |
| TELEPHONE | CB | JK |
| ELECTRIC | JH | TK |
| DESIGN | AA | JK |
| QUANTITIES | AA | JK |
| PRELIMINARY/FINAL | AA | JK |
| MUNICIPAL/STATE | AA | JK |

PLAN CHECK

| FIELD BOOKS | BM NO. | LOCATION | ELEV. |
|---|---|---|---|
| DESIGN CRW BOOK No. 149, 169, | CB 7D | See MOA Benchmark Book, Page D–56 | 94.77 |
| 195 & 196 | CB 7C | See MOA Benchmark Book, Page D–17 | 106.10 |
| STAKING | GAAB 86 | See MOA Benchmark Book, Page D–18 | 104.53 |
| ASBUILT | | | |
| CONTRACTOR | BASIS OF THIS DATUM GAAB 1972 ADJUST | | |
| INSPECTOR | | | |

CONSTRUCTION RECORD

VERTICAL DATUM

| REV | DATE | DESCRIPTION | BY |
|---|---|---|---|
| | | | |

REVISIONS

CRW ENGINEERING GROUP, LLC
3940 ARCTIC BLVD. SUITE 300
ANCHORAGE, ALASKA 99503
PHONE: (907) 562–3252
#AECL882–AK

CONSULTANT

STATE OF ALASKA 49 TH Justin T. Keene CE-11775 REGISTERED PROFESSIONAL ENGINEER

SEAL

MUNICIPALITY OF ANCHORAGE

PROJECT MANAGEMENT AND ENGINEERING DEPARTMENT

16–29 W. 32ND AVENUE & E. 33RD AVENUE UPGRADES ALL
ARCTIC BOULEVARD TO OLD SEWARD HIGHWAY

INDEX

SCALE HOR. N/A VER. N/A | GRID SW1629, SW1630, SW1631 | DATE JAN 2020 | STATUS 65% | SHEET G2 of G6

File:J:\JobsData\10138.00 W 32nd And E 33rd Avenue Upgrade\00 CADD\01 Working Set\01 Civil\01 Design\10138.00 Index-Notes.dwg

Volume 2

## SHEET INDEX

| SHEET NO. | DESCRIPTION | WORK SCHEDULE |
|---|---|---|
| STORM DRAIN | | |
| SD1 | STORM DRAIN PLAN AND PROFILE – W 32ND AVENUE BOP TO STA 106+00 | SCHED B |
| SD2 | STORM DRAIN PLAN AND PROFILE – W. 32ND AVENUE STA 106+00 TO STA 114+00 | SCHED B |
| SD3 | STORM DRAIN PLAN AND PROFILE – W. 32ND AVENUE STA 114+00 TO STA 121+00 | SCHED B |
| SD4 | STORM DRAIN PLAN AND PROFILE – W. 32ND AVENUE/CALAIS DRIVE STA 121+00 TO STA 129+00 | SCHED B |
| SD5 | STORM DRAIN PLAN AND PROFILE – CALAIS DRIVE STA 129+00 TO STA 133+00 | SCHED B |
| SD6 | STORM DRAIN PLAN AND PROFILE – CALAIS DRIVE STA 133+00 TO STA 140+00 | SCHED B |
| SD7 | STORM DRAIN PLAN AND PROFILE – E. 33RD AVENUE STA 140+00 TO STA 147+00 | SCHED B |
| SD8 | STORM DRAIN PLAN AND PROFILE – E. 33RD AVENUE STA 147+00 TO EOP | SCHED B |
| SD9 | STORM DRAIN PLAN AND PROFILE – FAIRBANKS STREET | SCHED B |
| SD10 | STORM DRAIN PLAN AND PROFILE – E. 34TH AVENUE | SCHED B |
| SD11 | STORM DRAIN PLAN AND PROFILE – PATHWAY | SCHED B |
| SD12 | STORM DRAIN DETAILS | SCHED B |
| SD13 | STORM DRAIN DETAILS | SCHED B |
| SD14 | STORM DRAIN DETAILS | SCHED B |
| SIGNALIZATION | | |
| J1 | SIGNAL LEGEND & NOTES | SCHED C |
| J2 | C STREET SIGNAL PLAN | SCHED C |
| J3 | C STREET SIGNAL WIRING PLAN | SCHED C |
| J4 | A STREET SIGNAL PLAN | SCHED C |
| J5 | A STREET SIGNAL WIRING PLAN | SCHED C |
| J6 | DENALI STREET SIGNAL PLAN | SCHED C |
| J7 | DENALI STREET SIGNAL WIRING PLAN | SCHED C |
| J8 | C STREET SIGNAL DETAILS | SCHED C |
| J9 | C STREET SIGNAL DETAILS | SCHED C |
| J10 | A STREET SIGNAL DETAILS | SCHED C |
| J11 | A STREET SIGNAL DETAILS | SCHED C |
| J12 | DENALI STREET SIGNAL DETAILS | SCHED C |
| J13 | DENALI STREET SIGNAL DETAILS | SCHED C |
| J14 | SIGNALIZATION TABLES | SCHED C |
| ELECTRICAL | | |
| I1 | ILLUMINATION DESIGN – W. 32ND AVENUE BOP TO STA 111+74 | SCHED C |
| I2 | ILLUMINATION DESIGN – W. 32ND AVENUE STA 11+74 TO STA 123+75 | SCHED C |
| I3 | ILLUMINATION DESIGN – W. 32ND AVENUE/CALAIS DRIVE STA 123+75 TO 133+22 | SCHED C |
| I4 | ILLUMINATION DESIGN – CALAIS DRIVE/E. 33RD AVENUE STA 133+22 TO STA 144+23 | SCHED C |
| I5 | ILLUMINATION DESIGN – E. 33RD AVENUE STA 144+24 TO EOP | SCHED C |
| I6 | ILLUMINATION DESIGN – FAIRBANKS STREET & E. 34TH AVENUE | SCHED C |
| I7 | ILLUMINATION DESIGN – PATHWAY | SCHED C |
| I8 | ILLUMINATION SCHEDULES | SCHED C |
| I9 | LOAD CENTER A | SCHED C |
| I10 | LOAD CENTER C | SCHED C |
| I11 | LOAD CENTER D | SCHED C |
| I12 | LOAD CENTER U | SCHED C |
| I13 | LOAD CENTER V | SCHED C |
| I14 | PEDESTRIAN LIGHT COLUMN DETAILS | SCHED C |
| LANDSCAPE | | |
| L1 | LANDSCAPE KEY PLAN & SCHEDULES | SCHED D |
| L2 | LANDSCAPE PLAN – W. 32ND AVENUE BOP TO STA 105+50 | SCHED D |
| L3 | LANDSCAPE PLAN – W. 32ND AVENUE STA 105+50 TO STA 111+50 | SCHED D |
| L4 | LANDSCAPE PLAN – W. 32ND AVENUE STA 111+50 TO STA 117+50 | SCHED D |
| L5 | LANDSCAPE PLAN – W. 32ND AVENUE STA 117+50 TO STA 123+50 | SCHED D |
| L6 | LANDSCAPE PLAN – W. 32ND AVENUE/CALAIS DRIVE STA 123+50 TO STA 128+50 | SCHED D |
| L7 | LANDSCAPE PLAN – CALAIS DRIVE STA 128+50 TO STA 133+00 | SCHED D |
| L8 | LANDSCAPE PLAN – CALAIS DRIVE STA 133+00 TO STA 138+00 | SCHED D |
| L9 | LANDSCAPE PLAN – E. 33RD AVENUE STA 138+00 TO STA 144+00 | SCHED D |
| L10 | LANDSCAPE PLAN – E. 33RD AVENUE STA 144+00 TO STA 150+00 | SCHED D |
| L11 | LANDSCAPE PLAN – E. 33RD AVENUE STA 150+00 TO EOP | SCHED D |
| L12 | LANDSCAPE PLAN – FAIRBANKS STREET | SCHED D |
| L13 | LANDSCAPE PLAN – E. 34TH AVENUE | SCHED D |
| L14 | LANDSCAPE PLAN – PATHWAY | SCHED D |

## SHEET INDEX

| SHEET NO. | DESCRIPTION | WORK SCHEDULE |
|---|---|---|
| L15 | LANDSCAPE DETAILS | SCHED D |
| L16 | LANDSCAPE DETAILS | SCHED D |
| L17 | LANDSCAPE DETAILS | SCHED D |
| L18 | LANDSCAPE DETAILS | SCHED D |
| L19 | LANDSCAPE DETAILS | SCHED D |

**RECORD DRAWING**

1. DATA PROVIDED BY: _____ TITLE: _____
   THIS WILL SERVE TO CERTIFY THAT THESE RECORD DRAWINGS ARE A TRUE AND ACCURATE REPRESENTATION OF THE PROJECT AS CONSTRUCTED.
   CONTRACTOR: _____
   BY: _____ TITLE: _____ DATE: _____
2. DATA TRANSFERRED BY: _____ TITLE: _____
   COMPANY: _____ DATE: _____
3. BASED ON PERIODIC FIELD OBSERVATIONS BY THE ENGINEER (OR AN INDIVIDUAL UNDER HIS/HER DIRECT SUPERVISION), THE CONTRACTOR-PROVIDED DATA APPEARS TO REPRESENT THE PROJECT AS CONSTRUCTED.
   DATA TRANSFER CHECKED BY: _____ TITLE: _____
   COMPANY: _____ DATE: _____
   BY: _____

| DATA | DRAWN BY | CHECKED BY |
|---|---|---|
| BASE | TS | MJ |
| TOPOGRAPHY | BW | BW |
| PROFILE | AA | JK |
| STORM SEWER | MV | JH |
| WATER/SANITARY SEWER | CB | JK |
| GAS | CB | JK |
| TELEPHONE | CB | JK |
| ELECTRIC | JH | TK |
| DESIGN | AA | JK |
| QUANTITIES | AA | JK |
| PRELIMINARY/FINAL | AA | JK |
| MUNICIPAL/STATE | AA | JK |

PLAN CHECK

| FIELD BOOKS | BM NO. | LOCATION | ELEV. |
|---|---|---|---|
| DESIGN CRW BOOK No. 149, 169, | CB 7D | See MOA Benchmark Book, Page D-56 | 94.77 |
| 195 & 196 | CB 7C | See MOA Benchmark Book, Page D-17 | 106.10 |
| STAKING | GAAB 86 | See MOA Benchmark Book, Page D-18 | 104.53 |
| ASBUILT | | | |
| CONTRACTOR | BASIS OF THIS DATUM GAAB 1972 ADJUST | | |
| INSPECTOR | | | |

CONSTRUCTION RECORD

VERTICAL DATUM

| REV | DATE | DESCRIPTION | BY |
|---|---|---|---|
| | | | |

REVISIONS

CRW ENGINEERING GROUP, LLC
3940 ARCTIC BLVD. SUITE 300
ANCHORAGE, ALASKA 99503
PHONE: (907) 562-3252
#AECL882-AK

CONSULTANT

STATE OF ALASKA 49TH Justin T. Keene CE-11775 REGISTERED PROFESSIONAL ENGINEER

SEAL

MUNICIPALITY OF ANCHORAGE

PROJECT MANAGEMENT AND ENGINEERING DEPARTMENT

16-29 W. 32ND AVENUE & E. 33RD AVENUE UPGRADES ALL
ARCTIC BOULEVARD TO OLD SEWARD HIGHWAY

INDEX

SCALE HOR. N/A VER. N/A | GRID SW1629, SW1630, SW1631 | DATE JAN 2020 | STATUS 65% | SHEET G3 of G6

File: J:\JobsData\10138.00 W 32nd And E 33rd Avenue Upgrade\00 CADD\01 Working Set\01 Civil\01 Design\10138.00 Index-Notes.dwg

## GENERAL NOTES

1. ALL WORK SHALL BE IN ACCORDANCE WITH THE MUNICIPALITY OF ANCHORAGE (MOA) STANDARD SPECIFICATIONS, DATED 2015, (HEREINAFTER REFERRED TO AS MASS), THE LATEST EDITION OF THE ANCHORAGE WATER AND WASTEWATER UTILITY (AWWU) DESIGN AND CONSTRUCTION PRACTICES MANUAL (DCPM) AND THE SPECIAL PROVISIONS.
2. THE LOCATION OF THE EXISTING FEATURES AND UTILITIES SHOWN IN THESE DRAWINGS ARE APPROXIMATE. THE CONTRACTOR SHALL VERIFY THE HORIZONTAL AND VERTICAL LOCATION OF ALL FEATURES AND UTILITIES ENCOUNTERED AND RECORD THEIR LOCATION ON THE CONTRACT RECORD DRAWINGS. DISCREPANCIES SHALL BE BROUGHT TO THE IMMEDIATE ATTENTION OF THE ENGINEER.
3. THE CONTRACTOR SHALL OBTAIN ALL NECESSARY PERMITS PRIOR TO BEGINNING CONSTRUCTION. THE PERMITS SHALL BE MAINTAINED ON THE PROJECT SITE. COPIES SHALL BE GIVEN TO THE ENGINEER.
4. ALL WORK IN CLOSE PROXIMITY TO EXISTING OVERHEAD TELEPHONE AND ELECTRIC UTILITIES SHALL COMPLY WITH APPLICABLE FEDERAL, STATE AND LOCAL STATUTES, CODES AND GUIDELINES AND THE SHORING AND CLEARANCE REQUIREMENTS OF THE SERVING UTILITY.
5. LIMITS OF ROADWAY EXCAVATION SHOWN ON THE DRAWINGS ARE APPROXIMATE. ACTUAL LIMITS WILL BE DETERMINED IN THE FIELD BY THE ENGINEER DURING CONSTRUCTION OPERATIONS.
6. GEOTECHNICAL (SOILS) INFORMATION IS INCLUDED IN THE CONTRACT DOCUMENTS.
7. ALL WORK SHALL BE PERFORMED WITHIN PUBLIC RIGHT-OF-WAY, PUBLIC USE EASEMENT, SLOPE EASEMENT, TEMPORARY CONSTRUCTION EASEMENT, DRAINAGE EASEMENT, ELECTRIC EASEMENT, INTRAGOVERNMENTAL USE PERMIT OR, TEMPORARY CONSTRUCTION PERMIT AREAS. ALL DISTURBED AREAS SHALL BE RESTORED TO ORIGINAL CONDITION, UNLESS OTHERWISE NOTED. REVEGETATION SHALL BE IN ACCORDANCE WITH THE PLANS AND SPECIFICATIONS.
8. CONTRACTOR SHALL RESTORE DISTURBED PROPERTY TO PRE-CONSTRUCTION CONDITIONS, UNLESS OTHERWISE DIRECTED BY ENGINEER. PAYMENT FOR RESTORING DISTURBED PROPERTY OUTSIDE OF IDENTIFIED CONSTRUCTION LIMITS SHALL BE CONSIDERED INCIDENTAL TO THE PROJECT AND NO SEPARATE PAYMENT SHALL BE MADE. DISTURBED AREAS NOT BEING PAVED SHALL BE TOPSOILED AND SEEDED WITH SCHEDULE A SEEDING MIX UNLESS OTHERWISE NOTED.
9. PROJECT CLEARING AND GRUBBING LIMITS SHALL COINCIDE WITH THE LIMITS OF DISTURBANCE AS SHOWN ON THE DEMOLITION (B) SHEETS. CONTRACTOR SHALL OBTAIN APPROVAL OF THE CLEARING AND GRUBBING LIMITS BY THE ENGINEER PRIOR TO CLEARING AND GRUBBING, SEE SPECIFICATIONS FOR MORE INFORMATION.
10. SLOPE LIMITS SHOWN ON THE DRAWINGS ARE APPROXIMATE. THE CONTRACTOR SHALL DETERMINE THE ACTUAL SLOPE LIMITS BASED ON PRECONSTRUCTION SURVEY DATA.
11. IN PREPARATION FOR AND IMMEDIATELY PRIOR TO PAVING, THE CONTRACTOR SHALL SAW CUT AND REMOVE ADDITIONAL PAVEMENT BEYOND THE INITIAL SAW CUT, A MINIMUM OF 1-FOOT ONTO UNDISTURBED ASPHALT. AT TRANSVERSE JOINTS FINAL SAW CUT LINE SHALL BE SKEWED 15° – 25° PER DETAIL 3, SHEET D5. TACK COAT SHALL BE APPLIED TO THE SAWN FACE OF ASPHALT PRIOR TO BEGINNING PAVING.
12. PAVEMENT CROSS SLOPE ON SIDE STREETS SHALL VARY AT INTERSECTIONS TO PROVIDE POSITIVE DRAINAGE. SEE ROADWAY (R) SHEETS FOR INTERSECTION LAYOUTS.
13. ALL WORK AND MATERIALS REQUIRED FOR REMOVING ANY LITTER OR DEBRIS CREATED BY CONSTRUCTION OPERATIONS WITHIN THE PROJECT LIMITS SHALL BE CONSIDERED INCIDENTAL TO THE PROJECT AND NO SEPARATE PAYMENT WILL BE MADE.
14. ALL ORGANIC MATERIAL SHALL BE REMOVED FROM THE SUBGRADE TO A DEPTH TO BE DETERMINED BY THE ENGINEER. NO ORGANIC MATERIAL OR OTHER DELETERIOUS MATERIAL SHALL BE UTILIZED FOR BACKFILL.
15. THE CONTRACTOR SHALL SUBMIT RECORD SURVEY NOTES WITH THE RECORD DRAWINGS.
16. EXCAVATION SHALL BE MEASURED BY EXCAVATED CROSS-SECTION AND SHALL BE LIMITED TO THE PAY LIMITS IDENTIFIED IN THE TYPICAL CROSS SECTIONS, UNLESS ADDITIONAL EXCAVATION IS DIRECTED BY THE ENGINEER.
17. THE PROJECT CENTERLINE STATIONING IS NOT RIGHT-OF-WAY CENTERLINE PER SURVEY CONTROL DRAWING UNLESS OTHERWISE NOTED. SEE SURVEY CONTROL DRAWING FOR HORIZONTAL AND VERTICAL CONTROL AND LAYOUT OF THE PROJECT CENTERLINE.
18. THE EASEMENTS AND TEMPORARY CONSTRUCTION PERMITS ACQUIRED FOR THIS PROJECT MAY HAVE RESTRICTIONS. SEE CONTRACT DOCUMENTS FOR RESTRICTIONS.
19. ALL CURB LOCATIONS, RADIUS MEASUREMENTS AND ELEVATIONS ARE TO THE TOP BACK OF CURB (TBC) UNLESS OTHERWISE NOTED.
20. FURNISH AND INSTALL 4" PIPE INSULATION BOARD (R-20) BETWEEN THE STORM DRAIN IMPROVEMENTS AND THE WATER AND SEWER UTILITIES WHEN THE VERTICAL CLEARANCE IS LESS THAN THREE FEET. IF 18 INCHES OF VERTICAL SEPARATION BETWEEN WATER AND SEWER/STORM DRAINS CANNOT BE MAINTAINED THEN WATER RELOCATION WILL BE REQUIRED. SEWER/STORM DRAIN PIPE JOINTS SHALL BE PLACED AT LEAST NINE (9) FEET FROM A WATER CROSSING.
21. EXISTING WATER AND SEWER SERVICE LINES ARE NOT SHOWN IN THE PROFILES UNLESS SPECIFICALLY CALLED OUT.
22. WATER RESULTING FROM THE CONTRACTOR'S DEWATERING EFFORT MAY NOT BE PUMPED OR OTHERWISE DIVERTED INTO EXISTING STORM DRAINS OR SANITARY SEWERS UNLESS REQUIRED PERMITS, INCLUDING, BUT NOT LIMITED TO, PERMITS FROM THE MOA STORM WATER PLAN REVIEW OFFICE, AWWU, AND THE ALASKA DEPARTMENT OF ENVIRONMENTAL CONSERVATION, ARE OBTAINED BY THE CONTRACTOR. UNDER NO CIRCUMSTANCES SHALL THE CONTRACTOR BE ALLOWED TO DIVERT WATER FROM EXCAVATION ONTO ROADWAYS. THE CONTRACTOR SHALL PROVIDE DISPOSAL SITE FOR EXCESS WATER AND SHALL BE RESPONSIBLE FOR SECURING ALL NECESSARY PERMITS AND APPROVALS. THE CONTRACTOR SHALL PROVIDE COPIES OF PERMITS AND APPROVALS TO THE ENGINEER AND MOA ROW PERMIT OFFICE PRIOR TO BEGINNING DEWATERING.
23. ALL CURB AND GUTTER SHALL BE PAID AS "P.C.C. CURB AND GUTTER (ALL TYPES)" EXCEPT FOR CURBS WITH STEEL CURB FACING WHICH SHALL BE PAID AS "P.C.C. CURB AND GUTTER (TYPE 1, STEEL CURB FACING)".
24. EXISTING UTILITIES AND PROPOSED UTILITIES ARE NOT SHOWN IN THE TYPICAL CROSS SECTIONS.
25. THE MATCH EXISTING ELEVATIONS AS SHOWN IN THE PLANS ARE APPROXIMATE. CONTRACTOR SHALL ADJUST PROPOSED GRADES AS REQUIRED TO MATCH INTO EXISTING ELEVATIONS PER THE DIRECTION OF THE ENGINEER.
26. ALL FILL, USABLE EXCAVATION, AND TRENCH BACKFILL SHALL BE COMPACTED TO NINETY-FIVE PERCENT (95%) OF MAXIMUM DENSITY AT OPTIMUM MOISTURE CONTENT, PER MASS DIVISION 20 EARTHWORK, BASED ON MODIFIED PROCTOR TEST VALUES. ALL FILLS SHALL BE PLACED IN LIFTS NOT EXCEEDING 12-INCHES.
27. CAUTION!!! THERE ARE EXISTING BUILDING FOUNDATIONS AT UNKNOWN LOCATIONS AND DEPTHS NEAR OR WITHIN THE PROJECT LIMITS. IT SHALL BE THE CONTRACTOR'S RESPONSIBILITY TO FIELD VERIFY THE LOCATION AND DEPTH OF EXISTING BUILDING FOUNDATIONS PRIOR TO CONSTRUCTION. THIS WORK SHALL BE INCIDENTAL TO THE CONTRACT AND NO SEPARATE PAYMENT SHALL BE MADE. CONTRACTOR SHALL REPAIR BUILDING FOUNDATIONS THAT ARE DAMAGED BY CONTRACTOR'S OPERATIONS AT NO COST TO OWNER.
28. FIRE HYDRANTS WILL BE ADJUSTED TO FINAL GRADE BY AWWU O&M DIVISION ON A REIMBURSABLE BASIS. THE CONTRACTOR IS TO PROVIDE WRITTEN NOTICE TO THE ENGINEER A MINIMUM OF SEVEN (7) DAYS PRIOR TO THE NEED FOR FINAL FIRE HYDRANT ADJUSTMENT. THE WRITTEN NOTICE IS TO CONTAIN, AT A MINIMUM, THE MANUFACTURER AND MODEL NUMBER OF THE HYDRANT AND VERTICAL ADJUSTMENT NEEDED IN SIX (6") INCREMENTS.

| WORK SCHEDULES | |
|---|---|
| A | ROADWAY IMPROVEMENTS |
| B | DRAINAGE IMPROVEMENTS |
| C | ILLUMINATION AND SIGNALIZATION IMPROVEMENTS |
| D | LANDSCAPING IMPROVEMENTS |

| CALL BEFORE YOU DIG!!! | |
|---|---|
| Alaska Digline, Inc. Statewide | 811 |
| Alaska Railroad | 265-2520 |
| Military Fuel Lines | 552-3760 |
| State Storm Drains | 333-2411 |

**RECORD DRAWING**

1. DATA PROVIDED BY: _____ TITLE: _____
   THIS WILL SERVE TO CERTIFY THAT THESE RECORD DRAWINGS ARE A TRUE AND ACCURATE REPRESENTATION OF THE PROJECT AS CONSTRUCTED.
   CONTRACTOR: _____
   BY: _____ TITLE: _____ DATE: _____
2. DATA TRANSFERRED BY: _____ TITLE: _____
   COMPANY: _____ DATE: _____
3. BASED ON PERIODIC FIELD OBSERVATIONS BY THE ENGINEER (OR AN INDIVIDUAL UNDER HIS/HER DIRECT SUPERVISION), THE CONTRACTOR-PROVIDED DATA APPEARS TO REPRESENT THE PROJECT AS CONSTRUCTED.
   DATA TRANSFER CHECKED BY: _____ TITLE: _____
   COMPANY: _____ DATE: _____
   BY: _____

| DATA | DRAWN BY | CHECKED BY |
|---|---|---|
| BASE | TS | MJ |
| TOPOGRAPHY | BW | BW |
| PROFILE | AA | JK |
| STORM SEWER | MV | JH |
| WATER/SANITARY SEWER | CB | JK |
| GAS | CB | JK |
| TELEPHONE | CB | JK |
| ELECTRIC | JH | TK |
| DESIGN | AA | JK |
| QUANTITIES | AA | JK |
| PRELIMINARY/FINAL | AA | JK |
| MUNICIPAL/STATE | AA | JK |

PLAN CHECK

| FIELD BOOKS | BM NO. | LOCATION | ELEV. |
|---|---|---|---|
| DESIGN CRW BOOK No. 149, 169, | CB 7D | See MOA Benchmark Book, Page D-56 | 94.77 |
| 195 & 196 | CB 7C | See MOA Benchmark Book, Page D-17 | 106.10 |
| STAKING | GAAB 86 | See MOA Benchmark Book, Page D-18 | 104.53 |
| | | | |
| | | | |
| ASBUILT | | | |
| CONTRACTOR | BASIS OF THIS DATUM GAAB 1972 ADJUST | | |
| INSPECTOR | | | |

CONSTRUCTION RECORD — VERTICAL DATUM

| REV | DATE | DESCRIPTION | BY |
|---|---|---|---|
| | | | |

REVISIONS

CRW ENGINEERING GROUP, LLC
3940 ARCTIC BLVD. SUITE 300
ANCHORAGE, ALASKA 99503
PHONE: (907) 562-3252
#AECL882-AK

CONSULTANT

STATE OF ALASKA 49 TH Justin T. Keene CE-11775 REGISTERED PROFESSIONAL ENGINEER

SEAL

MUNICIPALITY OF ANCHORAGE

PROJECT MANAGEMENT AND ENGINEERING DEPARTMENT

16-29 W. 32ND AVENUE & E. 33RD AVENUE UPGRADES ALL
ARCTIC BOULEVARD TO OLD SEWARD HIGHWAY

GENERAL NOTES

SCALE HOR. N/A VER. N/A | GRID SW1629, SW1630, SW1631 | DATE JAN 2020 | STATUS 65% | SHEET G4 of G6

File:J:\JobsData\10138.00 W 32nd And E 33rd Avenue Upgrade\00 CADD\01 Working Set\01 Civil\01 Design\10138.00 Index-Notes.dwg

# PLAN LEGEND

## PROPERTY

| EXISTING | PROPOSED | |
|---|---|---|
| | | CENTERLINE |
| | | EASEMENT LINE |
| | | PROPERTY LINE |
| | | ROW LINE |
| | | SECTION LINE |
| | | TEMPORARY CONSTRUCTION EASEMENT/PERMIT |

## UTILITY

| EXISTING | PROPOSED | |
|---|---|---|
| | | ABANDONED UTILITY |
| C | | CABLE TV LINE (UNDERGROUND) |
| OC | | CABLE TV LINE (OVERHEAD) |
| U.C. | | CABLE TV PEDESTAL |
| | | CONTROLLER OR ATR CABINET |
| | | CULVERT |
| | | DRY WELL |
| E | | ELECTRIC LINE (UNDERGROUND) |
| OE | | ELECTRIC LINE (OVERHEAD) |
| OEC | | ELECTRIC & CABLE TV LINE (OVERHEAD) |
| OE/T | | ELECTRIC & TELEPHONE LINE (OVERHEAD) |
| OE/T/C/FO | | ELECTRIC, TELEPHONE, CABLE, FIBER OPTIC (OH) |
| | | ELECTRIC JB TYPE IA |
| | | ELECTRIC JB TYPE II |
| | | ELECTRIC JB TYPE III |
| | | ELECTRIC LOAD CENTER |
| | | ELECTRIC MANHOLE/JB |
| E.M. | | ELECTRIC METER |
| U.E. | | ELECTRIC PEDESTAL UNDERGROUND |
| | | ELECTRIC SIGN |
| SC | | ELECTRIC SWITCH CABINET |
| | | ELECTRIC TRANSFORMER |
| E | | ELECTRIC VAULT |
| FO | | FIBER OPTIC LINE (UNDERGROUND) |
| FO | | FIBER OPTIC VAULT |
| FD | | FLOOR DRAIN |
| FS | FS | FOOTING DRAIN SERVICE LINE |
| FS | FS | FOOTING DRAIN SERVICE CONNECTION |
| F | | FUEL LINE |
| G | | GAS LINE |
| G.M. | | GAS METER |
| | | GAS VALVE |
| | | GUY POLE |
| | | GUY ANCHOR |
| | | JOINT USE UTILITY POLE |
| L | | LIGHTING LINE |
| | | LUMINAIRE |
| | | LUMINAIRE (PEDESTRIAN) |
| S | S | SANITARY SEWER LINE |
| | | SANITARY SEWER MANHOLE |
| | | SANITARY SEWER SERVICE CONNECTION |
| C.O. | | SANITARY SEWER CLEANOUT |
| SD | SD | STORM DRAIN LINE |
| SB | SB | SUBDRAIN LINE |
| | | STORM DRAIN CATCH BASIN |
| | | STORM DRAIN CATCH BASIN MANHOLE OR MH |
| | | STORM DRAIN MANHOLE (TYPE VARIES) |
| | | STUBOUT CAPPED OR PLUGGED END |

## UTILITY

| EXISTING | PROPOSED | |
|---|---|---|
| OT/C | | TELEPHONE & CABLE TV LINE (OH) |
| OT | | TELEPHONE LINE (OVERHEAD) |
| T | | TELEPHONE LINE (UNDERGROUND) |
| | | TELEPHONE MANHOLE |
| U.T. | | TELEPHONE PEDESTAL |
| 413 | 414 | TRAFFIC DETECTOR LOOPS |
| TF | | TRAFFIC LINE (UNDERGROUND) |
| | | TRAFFIC SIGNAL POLE |
| | | TRAFFIC SIGNAL POLE/LUMINAIRE |
| | | UTILITY POLE |
| W | W | WATER LINE |
| | | WATER FIRE HYDRANT |
| | | WATER KEY BOX |
| | | WATER MANHOLE |
| | | WATER VALVE |
| | | WATER WELL |

## ROADWAY

| EXISTING | PROPOSED | |
|---|---|---|
| | | APPROX SLOPE LIMITS (CUT) |
| | | APPROX SLOPE LIMITS (FILL) |
| | | CURB & GUTTER |
| | | EDGE OF PAVEMENT |
| | | EDGE OF CONCRETE |
| | | GUARDRAIL, BARRIER RAIL |
| | | CONCRETE JERSEY BARRIER |
| | | RETAINING WALL (TYPE VARIES) |
| | | STREET SIGN |
| | | UNPAVED (GRAVEL) EDGE OF ROAD/DWY |

## MISCELLANEOUS

| EXISTING | PROPOSED | |
|---|---|---|
| | | BLUFF AREA/ EARTHWORK SLOPE |
| | | BOLLARD/POST |
| | | BOULDER |
| | | DECK |
| | | DRAINAGE ARROW (DIRECTION OF FLOW) |
| | | DRAINAGE DITCH BOTTOM |
| | | DRAINAGE SWALE |
| | | DUMPSTER |
| | | FENCE (TYPE VARIES) |
| | | FENCE (DECORATIVE) |
| | | HOUSE OR STRUCTURE |
| M.B. | M.B. | MAILBOX (INDIVIDUAL) |
| | | MAILBOX (CLUSTER) |
| N.B. | | NEWS BOX |
| | | PARKING METER |
| | 1 | PARCEL NUMBERS |
| | | SPRINKLER HEAD |
| | | SPRINKLER CONTROL BOX |
| | | STREAM/EDGE OF WATERWAY |
| | | TREE/SHRUB (CONIFEROUS) |
| | | TREE/SHRUB (DECIDUOUS) |
| | | TEST BORING OR TEST HOLE |
| | | VEGETATION & BRUSH |

# PROFILE LEGEND

## SYMBOL

| EXISTING | PROPOSED | |
|---|---|---|
| | | APPROXIMATE ROADWAY |
| | | EXCAVATION LIMITS |
| | | EXISTING GROUND OVER PIPE |
| | 0.00% | GRADE AT CENTER LINE |
| | | GRADE AT LEFT ROW |
| | | GRADE AT RIGHT ROW |
| | | PIPE (PROFILE) |
| | | PIPE (SECTION) |
| | | STORM DRAIN CATCH BASIN/OGS |
| | | STORM DRAIN/SANITARY SEWER MANHOLE & PIPE |
| UTILITY CROSSING | | UTILITY CROSSING |
| | | INSULATION |

## LEGEND – SOIL

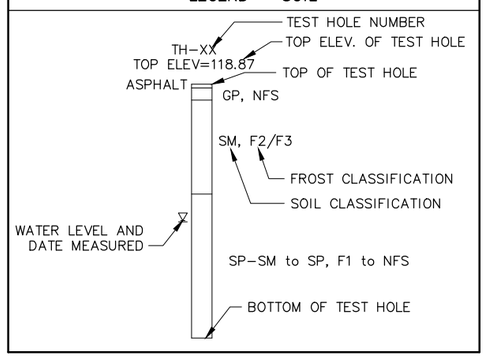


NOTES:

1. STANDARD LEGEND AND ABBREVIATIONS SHOWN. NOT ALL LEGEND ITEMS AND ABBREVIATIONS ARE PART OF THIS CONTRACT.
2. SOIL CLASSIFICATION IS BASED UPON UNIFIED SOIL CLASSIFICATION (ASTM D 2487-00), SEE GEOTECHNICAL SOIL BORING LOGS FOR MORE INFORMATION.
3. SEE LEGEND ON SHEET V1 FOR SURVEY CONTROL SYMBOLS. ADDITIONAL LEGEND AND ABBREVIATION ITEMS NOT SHOWN HERE ARE PROVIDED ON SPECIFIC SHEETS THROUGHOUT THE DRAWINGS.

## COMMON ABBREVIATIONS

| ABBR. | DESCRIPTION | ABBR. | DESCRIPTION |
|---|---|---|---|
| AC | ASPHALT CONCRETE | OC | ON CENTER |
| AC | ASBESTOS CONCRETE | OCEW | ON CENTER EACH WAY |
| APPROX | APPROXIMATE | OD | OUTSIDE DIAMETER |
| BM | BENCH MARK | OGS | OIL AND GRIT SEPARATOR |
| BOP | BEGINNING OF PROJECT | OH | OVERHEAD |
| C&G | CURB AND GUTTER | PC | POINT OF CURVATURE |
| CB | CATCH BASIN | PCC | PORTLAND CONCRETE CEMENT POINT OF CONTINUOUS CURVATURE |
| CBMH | CATCH BASIN MANHOLE | | |
| CI | CAST IRON | PI | POINT OF INTERSECTION |
| C/L, CL | CENTERLINE | PL, P/L | PROPERTY LINE |
| CMP | CORRUGATED METAL PIPE | PCMP | PRECOATED CORRUGATED METAL PIPE |
| CO | CLEANOUT | PCPEP | PERFORATED CORRUGATED POLYETHYLENE PIPE |
| CONST | CONSTRUCTION | | |
| CPEP | CORRUGATED POLYETHYLENE PIPE | PT | POINT OF TANGENCY |
| DIA | DIAMETER | PUE | PUBLIC USE EASEMENT |
| DIP | DUCTILE IRON PIPE | PVC | POINT OF VERTICAL CURVATURE |
| DW | DETECTABLE WARNING | PVC | POLYVINYL CHLORIDE |
| DWY | DRIVEWAY | PVI | POINT OF VERTICAL INTERSECTION |
| E | EAST | PVT | POINT OF VERTICAL TANGENT |
| ELEC | ELECTRIC / ELECTRICAL | REINF | REINFORCEMENT |
| ELEV, EL | ELEVATION | ROW, R/W | RIGHT OF WAY |
| EOP | END OF PROJECT / EDGE OF PAVEMENT | RPMP | REINFORCED POLYMER MORTAR PIPE |
| F&I | FURNISH AND INSTALL | RT, R | RIGHT |
| FG | FINISHED GRADE | S | SOUTH |
| GALV | GALVINIZED | S/W | SIDEWALK |
| GB | GRADE BREAK | SS | STAINLESS STEEL |
| JB | JUNCTION BOX | SEC COR | SECTION CORNER |
| LC | LOAD CENTER | SI | STREET INTERSECTION |
| IAW | IN ACCORDANCE WITH | ST | STREET |
| ID | INSIDE DIAMETER | STA | STATION / STATIONING |
| IE | INVERT ELEVATION | STD | STANDARD |
| INTX | INTERSECTION | STRUCT | STRUCTURE |
| INV | INVERT | TBC | TOP BACK OF CURB |
| LF | LINEAR FOOT | TBM | TEMPORARY BENCH MARK |
| LT, L | LEFT | TCP | TEMPORARY CONSTRUCTION PERMIT |
| LUM | LUMINAIRE | TELE | TELEPHONE |
| MAX | MAXIMUM | TH | TEST HOLE |
| ME | MATCH EXISTING | TW | TOP OF WALL |
| MH | MANHOLE | TYP | TYPICAL |
| MIN | MINIMUM | UG | UNDERGROUND |
| MON | MONUMENT | UON | UNLESS OTHERWISE NOTED |
| MSL | MEAN SEA LEVEL | UTIL | UTILITY |
| N | NORTH | VERT | VERTICAL |
| N/A | NOT APPLICABLE | VB | VALVE BOX |
| N.I.C. | NOT IN CONTRACT | VC | VERTICAL CURVE |
| NTS | NOT TO SCALE | W | WEST |
| NWT | NO WATER TABLE | W/ | WITH |

**RECORD DRAWING**

1. DATA PROVIDED BY: _____ TITLE: _____
   THIS WILL SERVE TO CERTIFY THAT THESE RECORD DRAWINGS ARE A TRUE AND ACCURATE REPRESENTATION OF THE PROJECT AS CONSTRUCTED.
   CONTRACTOR: _____
   BY: _____ TITLE: _____ DATE: _____
2. DATA TRANSFERRED BY: _____ TITLE: _____
   COMPANY: _____ DATE: _____
3. BASED ON PERIODIC FIELD OBSERVATIONS BY THE ENGINEER (OR AN INDIVIDUAL UNDER HIS/HER DIRECT SUPERVISION), THE CONTRACTOR-PROVIDED DATA APPEARS TO REPRESENT THE PROJECT AS CONSTRUCTED.
   DATA TRANSFER CHECKED BY: _____ TITLE: _____
   COMPANY: _____ DATE: _____
   BY: _____

| DATA | DRAWN BY | CHECKED BY |
|---|---|---|
| BASE | TS | MJ |
| TOPOGRAPHY | BW | BW |
| PROFILE | AA | JK |
| STORM SEWER | MV | JH |
| WATER/SANITARY SEWER | CB | JK |
| GAS | CB | JK |
| TELEPHONE | CB | JK |
| ELECTRIC | JH | TK |
| DESIGN | AA | JK |
| QUANTITIES | AA | JK |
| PRELIMINARY/FINAL | AA | JK |
| MUNICIPAL/STATE | AA | JK |

PLAN CHECK

| FIELD BOOKS | BM NO. | LOCATION | ELEV. |
|---|---|---|---|
| DESIGN CRW BOOK No. 149, 169, | CB 7D | See MOA Benchmark Book, Page D-56 | 94.77 |
| 195 & 196 | CB 7C | See MOA Benchmark Book, Page D-17 | 106.10 |
| STAKING | GAAB 86 | See MOA Benchmark Book, Page D-18 | 104.53 |
| ASBUILT | | | |
| CONTRACTOR | BASIS OF THIS DATUM GAAB 1972 ADJUST | | |
| INSPECTOR | | | |

CONSTRUCTION RECORD — VERTICAL DATUM

| REV | DATE | DESCRIPTION | BY |
|---|---|---|---|
| | | | |

REVISIONS

CRW ENGINEERING GROUP, LLC
3940 ARCTIC BLVD. SUITE 300
ANCHORAGE, ALASKA 99503
PHONE: (907) 562-3252
#AECL882-AK

CONSULTANT

STATE OF ALASKA 49TH — Justin T. Keene CE-11775 — REGISTERED PROFESSIONAL ENGINEER

SEAL

MUNICIPALITY OF ANCHORAGE

PROJECT MANAGEMENT AND ENGINEERING DEPARTMENT

16-29 W. 32ND AVENUE & E. 33RD AVENUE UPGRADES ARCTIC BOULEVARD TO OLD SEWARD HIGHWAY — ALL

LEGEND AND ABBREVIATIONS

SCALE HOR. N/A VER. N/A | GRID SW1629, SW1630, SW1631 | DATE JAN 2020 | STATUS 65% | SHEET G5 of G6

File:J:\JobsData\10138.00 W 32nd And E 33rd Avenue Upgrade\00 CADD\01 Working Set\01 Civil\01 Design\10138.00 Legend.dwg

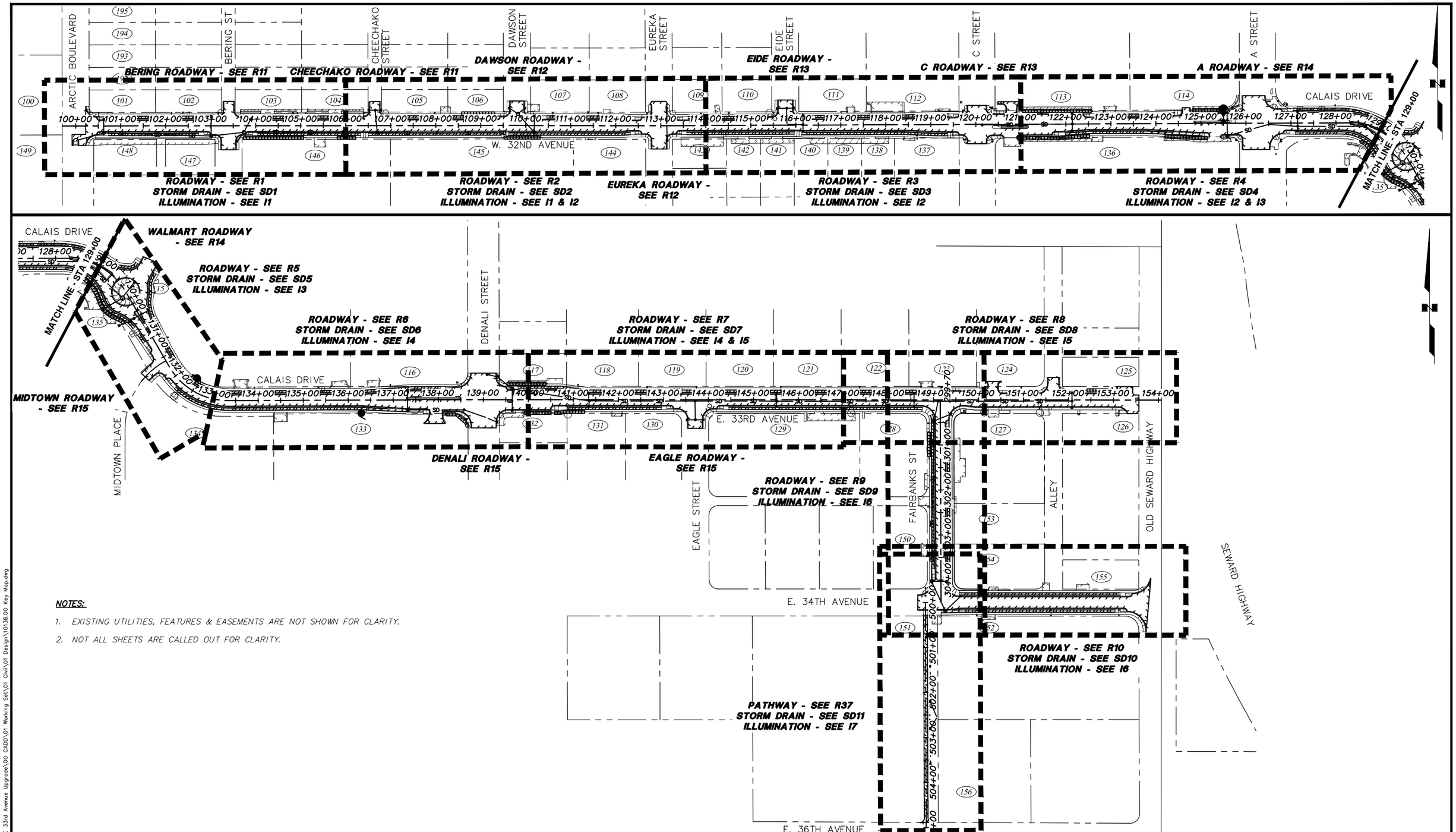


***NOTES:***

1. *EXISTING UTILITIES, FEATURES & EASEMENTS ARE NOT SHOWN FOR CLARITY.*
2. *NOT ALL SHEETS ARE CALLED OUT FOR CLARITY.*

**RECORD DRAWING**

1. DATA PROVIDED BY: _____ TITLE: _____
   THIS WILL SERVE TO CERTIFY THAT THESE RECORD DRAWINGS ARE A TRUE AND ACCURATE REPRESENTATION OF THE PROJECT AS CONSTRUCTED.
   CONTRACTOR: _____
   BY: _____ TITLE: _____ DATE: _____
2. DATA TRANSFERRED BY: _____ TITLE: _____
   COMPANY: _____ DATE: _____
3. BASED ON PERIODIC FIELD OBSERVATIONS BY THE ENGINEER (OR AN INDIVIDUAL UNDER HIS/HER DIRECT SUPERVISION), THE CONTRACTOR-PROVIDED DATA APPEARS TO REPRESENT THE PROJECT AS CONSTRUCTED.
   DATA TRANSFER CHECKED BY: _____ TITLE: _____
   COMPANY: _____ DATE: _____
   BY: _____

| DATA | DRAWN BY | CHECKED BY |
|---|---|---|
| BASE | TS | MJ |
| TOPOGRAPHY | BW | BW |
| PROFILE | AA | JK |
| STORM SEWER | MV | JH |
| WATER/SANITARY SEWER | CB | JK |
| GAS | CB | JK |
| TELEPHONE | CB | JK |
| ELECTRIC | JH | TK |
| DESIGN | AA | JK |
| QUANTITIES | AA | JK |
| PRELIMINARY/FINAL | AA | JK |
| MUNICIPAL/STATE | AA | JK |

PLAN CHECK

GRAPHIC 200 100 0 100 200 SCALE

| FIELD BOOKS | BM NO. | LOCATION | ELEV. |
|---|---|---|---|
| DESIGN CRW BOOK No. 149, 169, | CB 7D | See MOA Benchmark Book, Page D-56 | 94.77 |
| 195 & 196 | CB 7C | See MOA Benchmark Book, Page D-17 | 106.10 |
| STAKING | GAAB 86 | See MOA Benchmark Book, Page D-18 | 104.53 |
| ASBUILT | | | |
| CONTRACTOR | BASIS OF THIS DATUM GAAB 1972 ADJUST | | |
| INSPECTOR | | | |

CONSTRUCTION RECORD — VERTICAL DATUM

| REV | DATE | DESCRIPTION | BY |
|---|---|---|---|
| | | | |

REVISIONS

CRW ENGINEERING GROUP, LLC
3940 ARCTIC BLVD. SUITE 300
ANCHORAGE, ALASKA 99503
PHONE: (907) 562-3252
#AECL882-AK

CONSULTANT

STATE OF ALASKA 49TH Justin T. Keene CE-11775 REGISTERED PROFESSIONAL ENGINEER

SEAL

MUNICIPALITY OF ANCHORAGE

PROJECT MANAGEMENT AND ENGINEERING DEPARTMENT

16-29 W. 32ND AVENUE & E. 33RD AVENUE UPGRADES ALL
ARCTIC BOULEVARD TO OLD SEWARD HIGHWAY

KEY MAP

SCALE HOR. 1"=100' VER. N/A | GRID SW1629, SW1630, SW1631 | DATE JAN 2020 | STATUS 65% | SHEET G6 of G6

File: J:\Jobdata\10138.00 W 32nd And E 33rd Avenue Upgrade\00 CADD\01 Working Set\01 Civil\01 Design\10138.00 Key Map.dwg

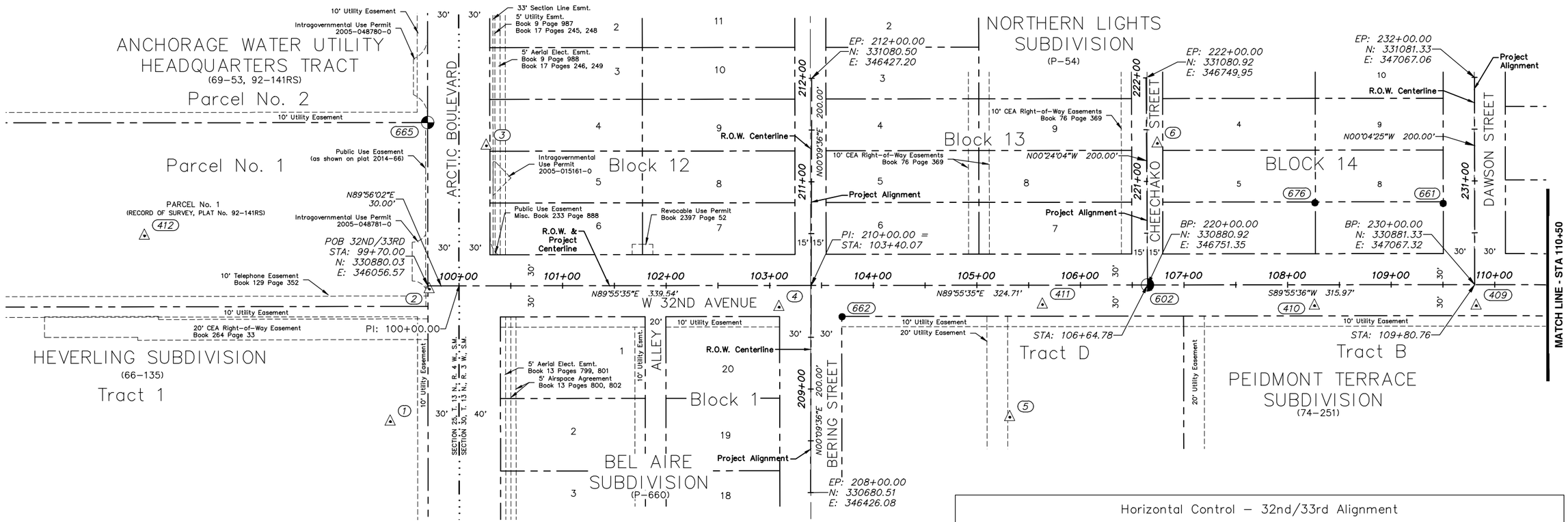


## Horizontal Control

Coordinate System:
This project is located entirely within the Anchorage Bowl 2000 adjustment, a local surface grid coordinate system expressed in U.S. Survey feet units developed by the Alaska Department of Transportation.

Basis of Coordinates:
The Basis of Coordinates is NGS Station O'Malley, located near the intersection of the New Seward Highway and O'Malley Road. Said station has Anchorage Bowl 2000 coordinates of 303939.2310 N, 353362.5446 E. U.S. Survey Feet.

Basis of Bearings:
The Basis of Bearings is a local plane bearing between NGS Station O'Malley and NGS Station Loop 2 USE RM 3 1964. NGS Station Loop 2 USE RM 3 1964 bears N 01°43'26.4" E a distance of 49488.4476 feet from NGS Station O'Malley. NGS Station Loop 2 USE RM 3 1964 has Anchorage Bowl 2000 coordinates of 353405.2778 N, 354851.3982 E. U.S. Survey Feet.

Translation Parameters:
To convert the local coordinates to NAD83 (92) State Plane coordinates expressed in U.S. Survey Feet, translate using +2,296,868.6878 N U.S. Survey Feet, +1,312,517.4904 E U.S. Survey Feet, and scale using 0.9998910192.

## Vertical Control

Vertical control is based on the MOA Benchmark GAAB–86, Elevation = 104.53 feet (GAAB), as described on page D–18 of the MOA Benchmark Book, MOA Benchmark CB 7C, Elevation = 106.10 feet (GAAB), as described on page D–17 of the MOA Benchmark Book, and MOA Benchmark CB 7D, Elevation = 94.77 feet (GAAB), as described on page D–56 of the MOA Benchmark Book.

## LEGEND

- Existing Brass Cap
- Existing Aluminum Cap
- Existing Rebar or Iron Pipe
- Control set by CRW
- (500) Control Point Number

### Horizontal Control – 32nd/33rd Alignment

| Point No | Station | Offset | Northing | Easting | Description |
|---|---|---|---|---|---|
| 412 | – | – | 330928.38 | 345783.09 | Set 5/8" Rebar with Red Plastic Cap |
| 665 | – | – | 331037.70 | 346056.27 | Found 3 1/4" Brass Cap 0.35' below rim of monument case |
| 1 | – | – | 330748.98 | 346020.40 | Set 1 1/8" Copper Survey Marker flush with pavement |
| 2 | 99+71.55 | 3.18 RT | 330876.86 | 346058.12 | Set 1 1/8" Copper Survey Marker flush with sidewalk |
| 3 | 100+26.71 | 135.23 LT | 331015.33 | 346113.10 | Set 1 1/8" Copper Survey Marker flush with sidewalk |
| 4 | 103+09.15 | 20.87 RT | 330859.60 | 346395.74 | Set 1 1/8" Copper Survey Marker flush with sidewalk |
| 662 | 103+69.84 | 30.27 RT | 330850.27 | 346456.45 | Found 5/8" Rebar 0.1' below grade |
| 5 | 105+31.73 | 127.41 RT | 330753.34 | 346618.46 | Set 1 1/8" Copper Survey Marker flush with pavement |
| 411 | 105+63.42 | 18.78 RT | 330862.01 | 346650.01 | Set 1 1/8" Copper Survey Marker flush with sidewalk |
| 602 | 106+64.63 | 0.07 LT | 330881.00 | 346751.20 | Found 1 1/2" Aluminum Cap flush with asphalt |
| 6 | 106+74.47 | 136.71 LT | 331017.64 | 346760.86 | Set 1 1/8" Copper Survey Marker flush with pavement |
| 410 | 108+26.07 | 20.19 RT | 330860.94 | 346912.66 | Set 1 1/8" Copper Survey Marker flush with sidewalk |
| 676 | 108+26.52 | 79.16 LT | 330960.29 | 346912.98 | Found 5/8" Rebar 0.6' below grade |
| 661 | 109+50.34 | 78.41 LT | 330959.70 | 347036.80 | Found 5/8" Rebar flush with ground |
| 409 | 109+82.26 | 20.38 RT | 330860.95 | 347068.77 | Set 1 1/8" Copper Survey Marker flush with sidewalk |

**RECORD DRAWING**
1. DATA PROVIDED BY: _____ TITLE: _____
THIS WILL SERVE TO CERTIFY THAT THESE RECORD DRAWINGS ARE A TRUE AND ACCURATE REPRESENTATION OF THE PROJECT AS CONSTRUCTED.
CONTRACTOR: _____
BY: _____ TITLE: _____ DATE: _____
2. DATA TRANSFERRED BY: _____ TITLE: _____
COMPANY: _____ DATE: _____
3. BASED ON PERIODIC FIELD OBSERVATIONS BY THE ENGINEER (OR AN INDIVIDUAL UNDER HIS/HER DIRECT SUPERVISION), THE CONTRACTOR–PROVIDED DATA APPEARS TO REPRESENT THE PROJECT AS CONSTRUCTED.
DATA TRANSFER CHECKED BY: _____ TITLE: _____
COMPANY: _____ DATE: _____
BY: _____

| DATA | DRAWN BY | CHECKED BY |
|---|---|---|
| BASE | TS | MJ |
| TOPOGRAPHY | BW | BW |
| PROFILE | AA | JK |
| STORM SEWER | MV | JH |
| WATER/SANITARY SEWER | CB | JK |
| GAS | CB | JK |
| TELEPHONE | CB | JK |
| ELECTRIC | JH | TK |
| DESIGN | AA | JK |
| QUANTITIES | AA | JK |
| PRELIMINARY/FINAL | AA | JK |
| MUNICIPAL/STATE | AA | JK |
| PLAN CHECK | | |

GRAPHIC 100 50 0 50 100 SCALE

| FIELD BOOKS | BM NO. | LOCATION | ELEV. |
|---|---|---|---|
| DESIGN CRW BOOK No. 149, 169, 195 & 196 | CB 7D | See MOA Benchmark Book, Page D–56 | 94.77 |
| | CB 7C | See MOA Benchmark Book, Page D–17 | 106.10 |
| STAKING | GAAB 86 | See MOA Benchmark Book, Page D–18 | 104.53 |
| ASBUILT | | | |
| CONTRACTOR | BASIS OF THIS DATUM GAAB 1972 ADJUST | | |
| INSPECTOR | | | |
| CONSTRUCTION RECORD | VERTICAL DATUM | | |

| REV | DATE | DESCRIPTION | BY |
|---|---|---|---|
| | | | |
| REVISIONS | | | |

CRW ENGINEERING GROUP, LLC
3940 ARCTIC BLVD. SUITE 300
ANCHORAGE, ALASKA 99503
PHONE: (907) 562–3252
#AECL582–AK
CONSULTANT

STATE OF ALASKA 49TH Michael L. Jokela LS-7839 REGISTERED PROFESSIONAL LAND SURVEYOR
SEAL

MUNICIPALITY OF ANCHORAGE

PROJECT MANAGEMENT AND ENGINEERING DEPARTMENT

16–29 W. 32ND AVENUE & E. 33RD AVENUE UPGRADES ALL
ARCTIC BOULEVARD TO OLD SEWARD HIGHWAY

SURVEY CONTROL

W. 32ND AVENUE
BOP TO STA 110+50

SCALE HOR. 1"=50' VER. N/A | GRID SW1629, SW1630, SW1631 | DATE JAN 2020 | STATUS 65% | SHEET V1 of V5

File:J:\JobsData\10138.00 W 32nd And E 33rd Avenue Upgrade\00 CADD\01 Working Set\02 Survey\03 Survey Control\10138.00 SCS – Phase 2–4.dwg

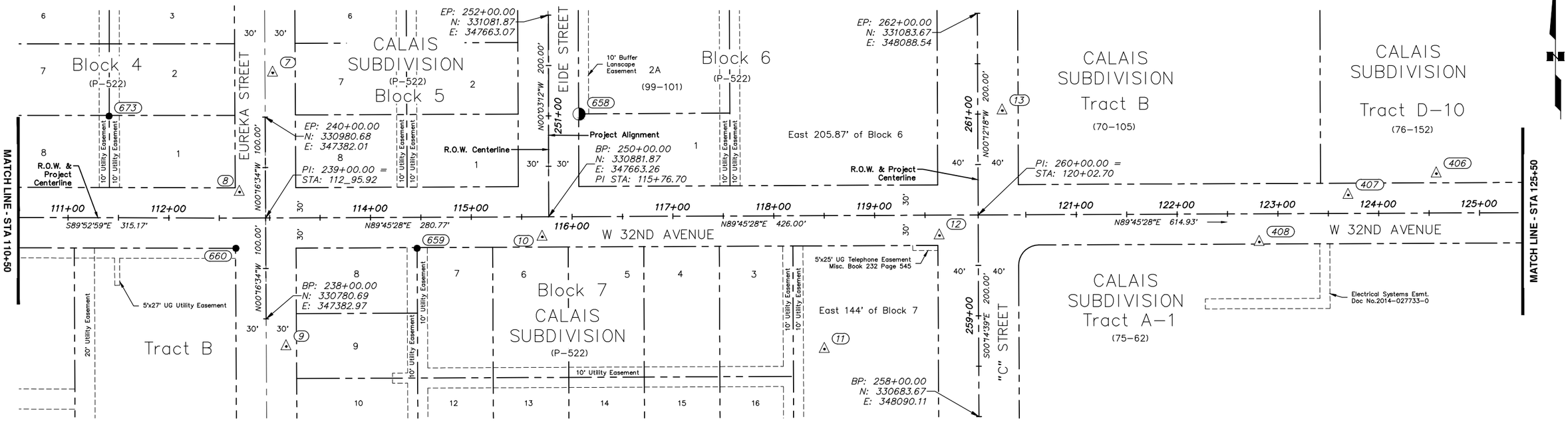


## Horizontal Control – 32nd/33rd Alignment

| Point No | Station | Offset | Northing | Easting | Description |
|---|---|---|---|---|---|
| 673 | 111+40.30 | 100.81 LT | 330981.70 | 347227.13 | Found 5/8" Rebar, bent |
| 660 | 112+66.27 | 29.88 RT | 330850.68 | 347352.96 | Found 5/8" Rebar 0.3' below grade |
| 8 | 112+70.24 | 25.93 LT | 330906.51 | 347356.70 | Set 1 1/8" Copper Survey Marker flush with sidewalk |
| 7 | 113+03.61 | 144.00 LT | 331024.71 | 347389.57 | Set 1 1/8" Copper Survey Marker flush with pavement |
| 9 | 113+15.93 | 127.49 RT | 330753.28 | 347403.03 | Set 1 1/8" Copper Survey Marker flush with sidewalk |
| 659 | 114+46.03 | 30.74 RT | 330850.58 | 347532.72 | Found 5/8" Rebar 0.3' below grade |
| 10 | 115+70.37 | 19.88 RT | 330861.97 | 347657.02 | Set 1 1/8" Copper Survey Marker flush with sidewalk |
| 658 | 116+07.15 | 101.70 LT | 330983.70 | 347693.28 | Found 3 1/4" Aluminum Cap 0.2' below grade |
| 11 | 118+49.77 | 132.30 RT | 330750.73 | 347936.89 | Set 1 1/8" Copper Survey Marker flush with pavement |
| 12 | 119+64.25 | 20.15 RT | 330863.36 | 348050.89 | Set 1 1/8" Copper Survey Marker flush with sidewalk |
| 13 | 120+27.17 | 103.46 LT | 330987.24 | 348113.29 | Set 1 1/8" Copper Survey Marker flush with sidewalk |
| 408 | 122+81.55 | 27.97 RT | 330856.88 | 348368.22 | Set 1 1/8" Copper Survey Marker flush with pavement |
| 407 | 123+69.98 | 18.28 LT | 330903.51 | 348456.46 | Set 1 1/8" Copper Survey Marker flush in back of curb |
| 406 | 124+57.45 | 39.11 LT | 330924.70 | 348543.84 | Set 1 1/8" Copper Survey Marker flush in back of curb |

### LEGEND

- Existing Brass Cap
- Existing Aluminum Cap
- Existing Rebar or Iron Pipe
- Control set by CRW
- (500) Control Point Number

**RECORD DRAWING**

1. DATA PROVIDED BY: _____ TITLE: _____
   THIS WILL SERVE TO CERTIFY THAT THESE RECORD DRAWINGS ARE A TRUE AND ACCURATE REPRESENTATION OF THE PROJECT AS CONSTRUCTED.
   CONTRACTOR: _____
   BY: _____ TITLE: _____ DATE: _____
2. DATA TRANSFERRED BY: _____ TITLE: _____
   COMPANY: _____ DATE: _____
3. BASED ON PERIODIC FIELD OBSERVATIONS BY THE ENGINEER (OR AN INDIVIDUAL UNDER HIS/HER DIRECT SUPERVISION), THE CONTRACTOR-PROVIDED DATA APPEARS TO REPRESENT THE PROJECT AS CONSTRUCTED.
   DATA TRANSFER CHECKED BY: _____ TITLE: _____
   COMPANY: _____ DATE: _____
   BY: _____

| DATA | DRAWN BY | CHECKED BY |
|---|---|---|
| BASE | TS | MJ |
| TOPOGRAPHY | BW | BW |
| PROFILE | AA | JK |
| STORM SEWER | MV | JH |
| WATER/SANITARY SEWER | CB | JK |
| GAS | CB | JK |
| TELEPHONE | CB | JK |
| ELECTRIC | JH | TK |
| DESIGN | AA | JK |
| QUANTITIES | AA | JK |
| PRELIMINARY/FINAL | AA | JK |
| MUNICIPAL/STATE | AA | JK |

PLAN CHECK

GRAPHIC 100 50 0 50 100 SCALE

| FIELD BOOKS | BM NO. | LOCATION | ELEV. |
|---|---|---|---|
| DESIGN CRW BOOK No. 149, 169, | CB 7D | See MOA Benchmark Book, Page D-56 | 94.77 |
| 195 & 196 | CB 7C | See MOA Benchmark Book, Page D-17 | 106.10 |
| STAKING | GAAB 86 | See MOA Benchmark Book, Page D-18 | 104.53 |
| | | | |
| | | | |
| ASBUILT | | | |
| CONTRACTOR | BASIS OF THIS DATUM GAAB 1972 ADJUST | | |
| INSPECTOR | | | |

CONSTRUCTION RECORD — VERTICAL DATUM

| REV | DATE | DESCRIPTION | BY |
|---|---|---|---|
| | | | |

REVISIONS

CRW ENGINEERING GROUP, LLC
3940 ARCTIC BLVD. SUITE 300
ANCHORAGE, ALASKA 99503
PHONE: (907) 562-3252
#AECL882-AK

CONSULTANT

STATE OF ALASKA 49TH Michael L. Jokela LS-7839 REGISTERED PROFESSIONAL LAND SURVEYOR

SEAL

MUNICIPALITY OF ANCHORAGE

PROJECT MANAGEMENT AND ENGINEERING DEPARTMENT

16-29 W. 32ND AVENUE & E. 33RD AVENUE UPGRADES ALL
ARCTIC BOULEVARD TO OLD SEWARD HIGHWAY

SURVEY CONTROL

W. 32ND AVENUE
110+50 TO STA 125+50

SCALE HOR. 1"=50' VER. N/A | GRID SW1629, SW1630, SW1631 | DATE JAN 2020 | STATUS 65% | SHEET V2 of V5

File:J:\JobsData\10138.00 W 32nd And E 33rd Avenue Upgrade\00 CADD\01 Working Set\02 Survey\03 Survey Control\10138.00 SCS - Phase 2-4.dwg

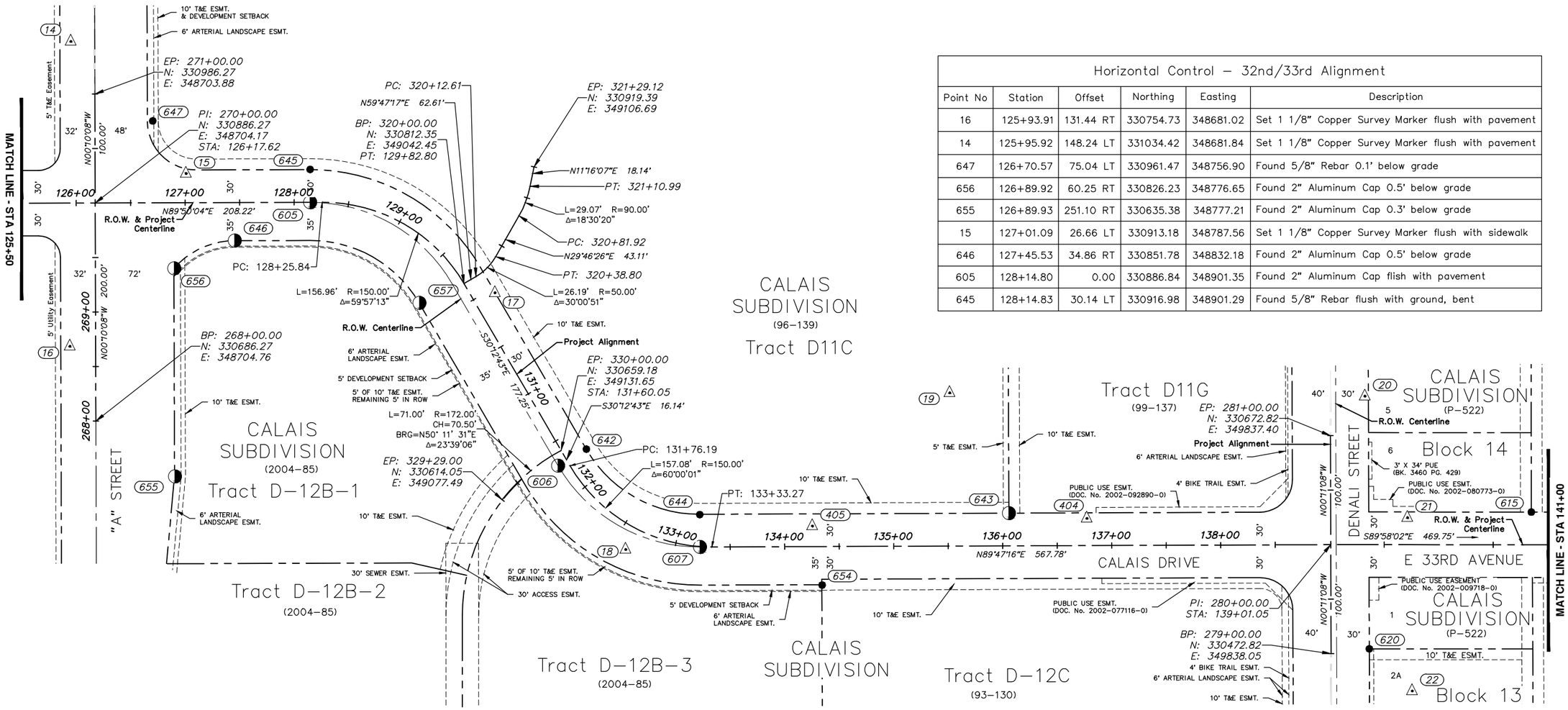


| Horizontal Control – 32nd/33rd Alignment | | | | | |
|---|---|---|---|---|---|
| Point No | Station | Offset | Northing | Easting | Description |
| 16 | 125+93.91 | 131.44 RT | 330754.73 | 348681.02 | Set 1 1/8" Copper Survey Marker flush with pavement |
| 14 | 125+95.92 | 148.24 LT | 331034.42 | 348681.84 | Set 1 1/8" Copper Survey Marker flush with pavement |
| 647 | 126+70.57 | 75.04 LT | 330961.47 | 348756.90 | Found 5/8" Rebar 0.1' below grade |
| 656 | 126+89.92 | 60.25 RT | 330826.23 | 348776.65 | Found 2" Aluminum Cap 0.5' below grade |
| 655 | 126+89.93 | 251.10 RT | 330635.38 | 348777.21 | Found 2" Aluminum Cap 0.3' below grade |
| 15 | 127+01.09 | 26.66 LT | 330913.18 | 348787.56 | Set 1 1/8" Copper Survey Marker flush with sidewalk |
| 646 | 127+45.53 | 34.86 RT | 330851.78 | 348832.18 | Found 2" Aluminum Cap 0.5' below grade |
| 605 | 128+14.80 | 0.00 | 330886.84 | 348901.35 | Found 2" Aluminum Cap flish with pavement |
| 645 | 128+14.83 | 30.14 LT | 330916.98 | 348901.29 | Found 5/8" Rebar flush with ground, bent |

| Horizontal Control – 32nd/33rd Alignment | | | | | |
|---|---|---|---|---|---|
| Point No | Station | Offset | Northing | Easting | Description |
| 657 | 129+75.40 | 44.18 RT | 330794.57 | 349001.54 | Found 2" Aluminum Cap |
| 17 | 130+04.57 | 20.37 LT | 330803.79 | 349071.01 | Set 1 1/8" Copper Survey Marker flush with sidewalk |
| 642 | 131+70.60 | 20.59 LT | 330660.43 | 349154.75 | Found 5/8" Rebar, bent |
| 606 | 131+70.64 | 9.48 RT | 330645.26 | 349128.78 | Found 1 1/2" Aluminum Cap flush with pavement |
| 18 | 132+61.39 | 21.42 RT | 330568.31 | 349190.92 | Set 1 1/8" Copper Survey Marker flush with sidewalk |
| 644 | 133+19.46 | 29.20 LT | 330600.39 | 349258.73 | Found 5/8" Rebar 0.5' below grade, bent |
| 607 | 133+22.33 | 0.40 RT | 330570.68 | 349258.99 | Found 2" Aluminum Cap flush with pavement |
| 405 | 134+25.60 | 18.90 LT | 330589.96 | 349362.21 | Set 1 1/8" Copper Survey Marker flush with sidewalk |
| 654 | 134+34.22 | 35.35 RT | 330535.74 | 349371.03 | Found 5/8" Rebar flush with ground |

| Horizontal Control – 32nd/33rd Alignment | | | | | |
|---|---|---|---|---|---|
| Point No | Station | Offset | Northing | Easting | Description |
| 19 | 135+52.01 | 140.52 LT | 330712.04 | 349488.17 | Set 1 1/8" Copper Survey Marker flush with pavement |
| 643 | 136+05.85 | 29.96 LT | 330601.69 | 349542.42 | Found 3 1/4" Aluminum Cap flush with ground |
| 404 | 136+77.48 | 24.90 LT | 330596.89 | 349614.07 | Set 1 1/8" Copper Survey Marker flush with sidewalk |
| 20 | 139+32.34 | 136.14 LT | 330708.96 | 349869.10 | Set 1 1/8" Copper Survey Marker flush with sidewalk |
| 620 | 139+36.48 | 95.57 RT | 330477.25 | 349873.09 | Found 5/8" Rebar 0.25' below pavement, bent to south |
| 21 | 139+71.46 | 24.75 LT | 330597.55 | 349908.15 | Set 1 1/8" Copper Survey Marker flush with sidewalk |
| 22 | 139+75.93 | 134.19 RT | 330438.61 | 349912.52 | Set 1 1/8" Copper Survey Marker flush with pavement |
| 615 | 140+85.03 | 29.91 LT | 330602.64 | 350021.73 | Found 5/8" Rebar with Yellow Plastic Cap flush with ground |
| 403 | 141+86.25 | 41.33 RT | 330531.33 | 350122.90 | Set 1 1/8" Copper Survey Marker flush with pavement |

## LEGEND

- Existing Brass Cap
- Existing Aluminum Cap
- Existing Rebar or Iron Pipe
- Control set by CRW
- (500) Control Point Number

**RECORD DRAWING**

1. DATA PROVIDED BY: _____ TITLE: _____
   THIS WILL SERVE TO CERTIFY THAT THESE RECORD DRAWINGS ARE A TRUE AND ACCURATE REPRESENTATION OF THE PROJECT AS CONSTRUCTED.
   CONTRACTOR: _____
   BY: _____ TITLE: _____ DATE: _____
2. DATA TRANSFERRED BY: _____ TITLE: _____
   COMPANY: _____ DATE: _____
3. BASED ON PERIODIC FIELD OBSERVATIONS BY THE ENGINEER (OR AN INDIVIDUAL UNDER HIS/HER DIRECT SUPERVISION), THE CONTRACTOR-PROVIDED DATA APPEARS TO REPRESENT THE PROJECT AS CONSTRUCTED.
   DATA TRANSFER CHECKED BY: _____ TITLE: _____
   COMPANY: _____ DATE: _____
   BY: _____

| DATA | DRAWN BY | CHECKED BY |
|---|---|---|
| BASE | TS | MJ |
| TOPOGRAPHY | BW | BW |
| PROFILE | AA | JK |
| STORM SEWER | MV | JH |
| WATER/SANITARY SEWER | CB | JK |
| GAS | CB | JK |
| TELEPHONE | CB | JK |
| ELECTRIC | JH | TK |
| DESIGN | AA | JK |
| QUANTITIES | AA | JK |
| PRELIMINARY/FINAL | AA | JK |
| MUNICIPAL/STATE | AA | JK |

PLAN CHECK

GRAPHIC 100 50 0 50 100 SCALE

| FIELD BOOKS | BM NO. | LOCATION | ELEV. |
|---|---|---|---|
| DESIGN CRW BOOK No. 149, 169, | CB 7D | See MOA Benchmark Book, Page D-56 | 94.77 |
| 195 & 196 | CB 7C | See MOA Benchmark Book, Page D-17 | 106.10 |
| STAKING | GAAB 86 | See MOA Benchmark Book, Page D-18 | 104.53 |
| | | | |
| | | | |
| ASBUILT | | | |
| CONTRACTOR | BASIS OF THIS DATUM GAAB 1972 ADJUST | | |
| INSPECTOR | | | |

CONSTRUCTION RECORD — VERTICAL DATUM

| REV | DATE | DESCRIPTION | BY |
|---|---|---|---|
| | | | |
| | | | |
| | | | |
| | | | |
| | | | |
| | | | |
| | | | |
| | | | |

REVISIONS

CRW ENGINEERING GROUP, LLC
3940 ARCTIC BLVD. SUITE 300
ANCHORAGE, ALASKA 99503
PHONE: (907) 562-3252
#ECL882-AK

CONSULTANT

STATE OF ALASKA 49TH Michael L. Jokela LS-7839 REGISTERED PROFESSIONAL LAND SURVEYOR

SEAL

MUNICIPALITY OF ANCHORAGE

PROJECT MANAGEMENT AND ENGINEERING DEPARTMENT

16-29 W. 32ND AVENUE & E. 33RD AVENUE UPGRADES ALL
ARCTIC BOULEVARD TO OLD SEWARD HIGHWAY

SURVEY CONTROL

W. 32ND AVENUE/CALAIS DRIVE/E. 33RD AVENUE
STA 125+50 TO STA 141+00

SCALE HOR. 1"=50' VER. N/A | GRID SW1629, SW1630, SW1631 | DATE JAN 2020 | STATUS 65% | SHEET V3 of V5

File: J:\JobsData\10138.00 W 32nd And E 33rd Avenue Upgrade\00 CADD\01 Working Set\02 Survey\03 Survey Control\10138.00 SCS - Phase 2-4.dwg

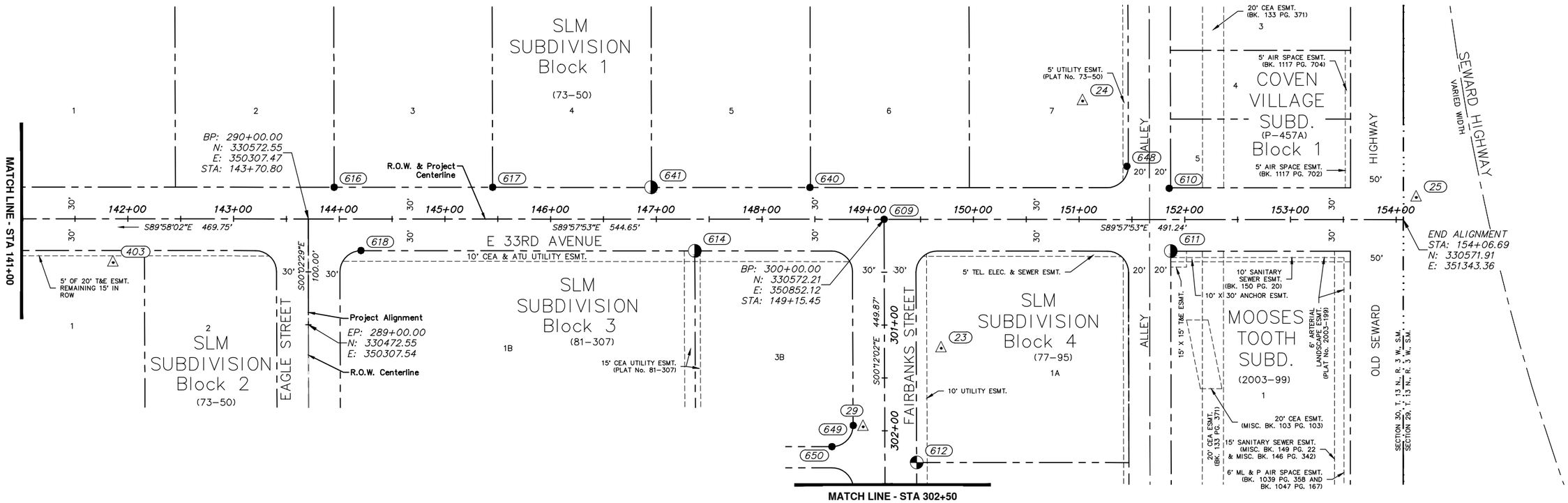


## Horizontal Control – 32nd/33rd Alignment

| Point No | Station | Offset | Northing | Easting | Description |
|---|---|---|---|---|---|
| 25 | -- | -- | 330592.81 | 351355.68 | Set 1 1/8" Copper Survey Marker flush with pavement |
| 403 | 141+86.25 | 41.33 RT | 330531.33 | 350122.90 | Set 1 1/8" Copper Survey Marker flush with pavement |
| 616 | 143+95.21 | 30.03 LT | 330602.56 | 350331.90 | Found 5/8" Rebar with Yellow Plastic Cap flush with pavement |
| 618 | 144+20.61 | 29.85 RT | 330542.67 | 350357.26 | Found 5/8" Rebar flush with ground |
| 617 | 145+45.09 | 30.10 LT | 330602.54 | 350481.78 | Found 5/8" Rebar flush with ground |
| 641 | 146+94.91 | 30.13 LT | 330602.48 | 350631.60 | Found 3 1/4" Aluminum Cap flush with ground |
| 614 | 147+36.43 | 30.00 RT | 330542.33 | 350673.08 | Found 3 1/4" Aluminum Cap 0.2' below grade |
| 640 | 148+45.28 | 30.02 LT | 330602.27 | 350781.98 | Found 5/8" Rebar 1.0' below ground |
| 609 | 149+15.45 | 0.00 | 330572.21 | 350852.12 | Found 5/8" Rebar flush with pavement |
| 24 | 151+03.28 | 111.88 LT | 330683.98 | 351040.03 | Set 1 1/8" Copper Survey Marker flush with pavement |
| 648 | 151+45.09 | 50.29 LT | 330622.37 | 351081.80 | Found 5/8" Rebar 0.2' below grade |
| 610 | 151+85.18 | 29.49 LT | 330601.54 | 351121.87 | Found 5/8" Rebar flush with pavement |
| 611 | 151+86.69 | 29.95 RT | 330542.10 | 351123.34 | Found 2 1/2" Aluminum Cap flush with ground |

## Horizontal Control – Fairbanks Alignment

| Point No | Station | Offset | Northing | Easting | Description |
|---|---|---|---|---|---|
| 23 | 301+22.14 | 53.69 LT | 330450.26 | 350906.24 | Set 1 1/8" Copper Survey Marker flush with pavement |
| 649 | 301+94.84 | 29.9 RT | 330377.28 | 350822.91 | Found 5/8" Rebar flush with ground |
| 29 | 301+96.18 | 20.44 RT | 330375.97 | 350832.37 | Set 1 1/8" Copper Survey Marker |
| 650 | 302+14.79 | 50.09 RT | 330357.25 | 350802.78 | Found 5/8" Rebar flush with ground |
| 612 | 302+30.12 | 29.99 LT | 330342.20 | 350882.92 | Found 2" Brass Cap flush with pavement |

## LEGEND

- Existing Brass Cap
- Existing Aluminum Cap
- Existing Rebar or Iron Pipe
- Control set by CRW
- (500) Control Point Number

**RECORD DRAWING**

1. DATA PROVIDED BY: _____ TITLE: _____
   THIS WILL SERVE TO CERTIFY THAT THESE RECORD DRAWINGS ARE A TRUE AND ACCURATE REPRESENTATION OF THE PROJECT AS CONSTRUCTED.
   CONTRACTOR: _____
   BY: _____ TITLE: _____ DATE: _____
2. DATA TRANSFERRED BY: _____ TITLE: _____
   COMPANY: _____ DATE: _____
3. BASED ON PERIODIC FIELD OBSERVATIONS BY THE ENGINEER (OR AN INDIVIDUAL UNDER HIS/HER DIRECT SUPERVISION), THE CONTRACTOR-PROVIDED DATA APPEARS TO REPRESENT THE PROJECT AS CONSTRUCTED.
   DATA TRANSFER CHECKED BY: _____ TITLE: _____
   COMPANY: _____ DATE: _____
   BY: _____

| DATA | DRAWN BY | CHECKED BY |
|---|---|---|
| BASE | TS | MJ |
| TOPOGRAPHY | BW | BW |
| PROFILE | AA | JK |
| STORM SEWER | MV | JH |
| WATER/SANITARY SEWER | CB | JK |
| GAS | CB | JK |
| TELEPHONE | CB | JK |
| ELECTRIC | JH | TK |
| DESIGN | AA | JK |
| QUANTITIES | AA | JK |
| PRELIMINARY/FINAL | AA | JK |
| MUNICIPAL/STATE | AA | JK |

PLAN CHECK

GRAPHIC 100 50 0 50 100 SCALE

| FIELD BOOKS | BM NO. | LOCATION | ELEV. |
|---|---|---|---|
| DESIGN CRW BOOK No. 149, 169, | CB 7D | See MOA Benchmark Book, Page D-56 | 94.77 |
| 195 & 196 | CB 7C | See MOA Benchmark Book, Page D-17 | 106.10 |
| STAKING | GAAB 86 | See MOA Benchmark Book, Page D-18 | 104.53 |
| | | | |
| | | | |
| ASBUILT | | | |
| CONTRACTOR | BASIS OF THIS DATUM GAAB 1972 ADJUST | | |
| INSPECTOR | | | |

CONSTRUCTION RECORD — VERTICAL DATUM

| REV | DATE | DESCRIPTION | BY |
|---|---|---|---|
| | | | |

REVISIONS

CRW ENGINEERING GROUP, LLC
3940 ARCTIC BLVD. SUITE 300
ANCHORAGE, ALASKA 99503
PHONE: (907) 562-3252
#AECL882-AK

CONSULTANT

STATE OF ALASKA 49TH Michael L. Jokela LS-7839 REGISTERED PROFESSIONAL LAND SURVEYOR

SEAL

MUNICIPALITY OF ANCHORAGE

PROJECT MANAGEMENT AND ENGINEERING DEPARTMENT

16-29 W. 32ND AVENUE & E. 33RD AVENUE UPGRADES ARCTIC BOULEVARD TO OLD SEWARD HIGHWAY — ALL

# SURVEY CONTROL

E. 33RD AVENUE
STA 141+00 TO EOP

SCALE HOR. 1"=50' VER. N/A | GRID SW1629, SW1630, SW1631 | DATE JAN 2020 | STATUS 65% | SHEET V4 of V5

File: J:\JobsData\10138.00 W 32nd And E 33rd Avenue Upgrade\00 CADD\01 Working Set\02 Survey\03 Survey Control\10138.00 SCS - Phase 2-4.dwg

| Horizontal Control – Fairbanks Alignment | | | | | |
|---|---|---|---|---|---|
| Point No | Station | Offset | Northing | Easting | Description |
| 639 | 304+00.01 | 30.04 RT | 330172.10 | 350823.48 | Found 5/8" Rebar flush with ground |
| 613 | 304+49.87 | 0 | 330122.34 | 350853.70 | Found 5/8" Rebar flush with pavement |

| Horizontal Control – E 34th Ave Alignment | | | | | |
|---|---|---|---|---|---|
| Point No | Station | Offset | Northing | Easting | Description |
| 28 | 400+89.86 | 30.81 RT | 330091.51 | 350943.55 | Set 1 1/8" Copper Survey Marker |
| 663 | 402+70.72 | 29.86 LT | 330152.13 | 351124.43 | Found 5/8" Rebar with Yellow Plastic Cap 0.4' below grade |
| 653 | 402+70.78 | 94.67 LT | 330216.94 | 351124.51 | Found 2 1/2" Aluminum Cap 0.4' below grade |
| 27 | 404+39.25 | 35.57 RT | 330086.65 | 351292.94 | Set 1 1/8" Copper Survey Marker |

| Horizontal Control – E 34th to 36th Ave. Trail Alignment | | | | | |
|---|---|---|---|---|---|
| Point No | Station | Offset | Northing | Easting | Description |
| 425 | 502+44.96 | 27.48 LT | 329877.49 | 350847.37 | Set 1 1/8" Copper Survey Marker flush with pavement |
| 426 | 504+90.58 | 27.76 LT | 329631.87 | 350848.51 | Found 2" Aluminum Cap flush with pavement |

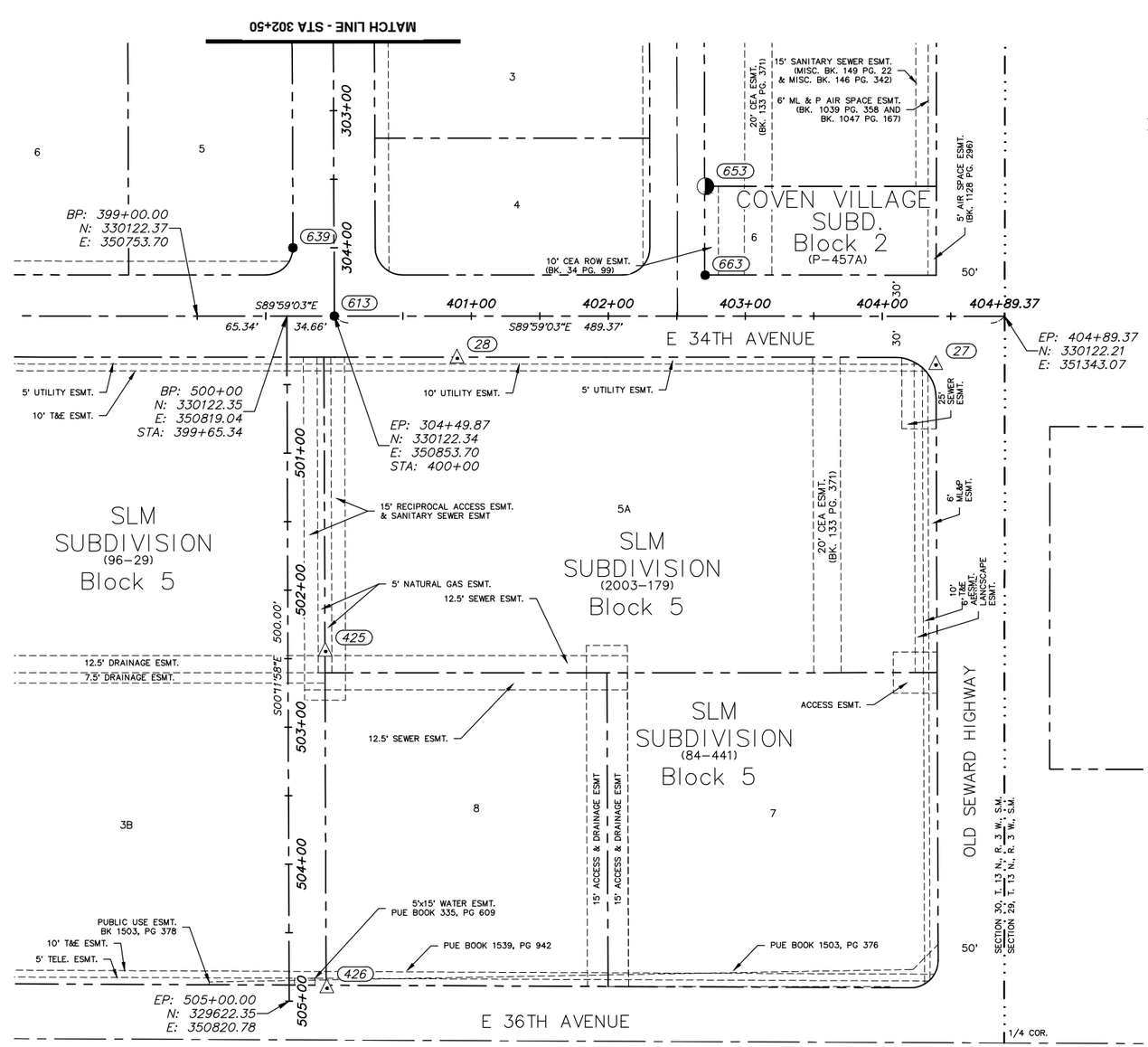


## LEGEND

- Existing Brass Cap
- Existing Aluminum Cap
- Existing Rebar or Iron Pipe
- Control set by CRW
- (500) Control Point Number

**RECORD DRAWING**

1. DATA PROVIDED BY: _____ TITLE: _____
   THIS WILL SERVE TO CERTIFY THAT THESE RECORD DRAWINGS ARE A TRUE AND ACCURATE REPRESENTATION OF THE PROJECT AS CONSTRUCTED.
   CONTRACTOR: _____
   BY: _____ TITLE: _____ DATE: _____
2. DATA TRANSFERRED BY: _____ TITLE: _____
   COMPANY: _____ DATE: _____
3. BASED ON PERIODIC FIELD OBSERVATIONS BY THE ENGINEER (OR AN INDIVIDUAL UNDER HIS/HER DIRECT SUPERVISION), THE CONTRACTOR-PROVIDED DATA APPEARS TO REPRESENT THE PROJECT AS CONSTRUCTED.
   DATA TRANSFER CHECKED BY: _____ TITLE: _____
   COMPANY: _____ DATE: _____
   BY: _____

| DATA | DRAWN BY | CHECKED BY |
|---|---|---|
| BASE | TS | MJ |
| TOPOGRAPHY | BW | BW |
| PROFILE | AA | JK |
| STORM SEWER | MV | JH |
| WATER/SANITARY SEWER | CB | JK |
| GAS | CB | JK |
| TELEPHONE | CB | JK |
| ELECTRIC | JH | TK |
| DESIGN | AA | JK |
| QUANTITIES | AA | JK |
| PRELIMINARY/FINAL | AA | JK |
| MUNICIPAL/STATE | AA | JK |
| PLAN CHECK | | |

GRAPHIC 100 50 0 50 100 SCALE

| FIELD BOOKS | BM NO. | LOCATION | ELEV. |
|---|---|---|---|
| DESIGN CRW BOOK No. 149, 169, | CB 7D | See MOA Benchmark Book, Page D-56 | 94.77 |
| 195 & 196 | CB 7C | See MOA Benchmark Book, Page D-17 | 106.10 |
| STAKING | GAAB 86 | See MOA Benchmark Book, Page D-18 | 104.53 |
| ASBUILT | | | |
| CONTRACTOR | BASIS OF THIS DATUM GAAB 1972 ADJUST | | |
| INSPECTOR | | | |

CONSTRUCTION RECORD — VERTICAL DATUM

| REV | DATE | DESCRIPTION | BY |
|---|---|---|---|
| | | | |

REVISIONS

CRW ENGINEERING GROUP, LLC
3940 ARCTIC BLVD. SUITE 300
ANCHORAGE, ALASKA 99503
PHONE: (907) 562-3252
#AECL682-AK
CONSULTANT

STATE OF ALASKA 49TH Michael L. Jokela LS-7839 REGISTERED PROFESSIONAL LAND SURVEYOR
SEAL

MUNICIPALITY OF ANCHORAGE

PROJECT MANAGEMENT AND ENGINEERING DEPARTMENT

16-29 W. 32ND AVENUE & E. 33RD AVENUE UPGRADES ALL
ARCTIC BOULEVARD TO OLD SEWARD HIGHWAY

SURVEY CONTROL

E. 34TH AVENUE
STA 399+00 TO 404+89.37

SCALE HOR. 1"=50' VER. N/A | GRID SW1629, SW1630, SW1631 | DATE JAN 2020 | STATUS 65% | SHEET V5 of V5

File: J:\JobsData\10138.00 W 32nd And E 33rd Avenue Upgrade\00 CADD\01 Working Set\02 Survey\03 Survey Control\10138.00 SCS - Phase 2-4.dwg

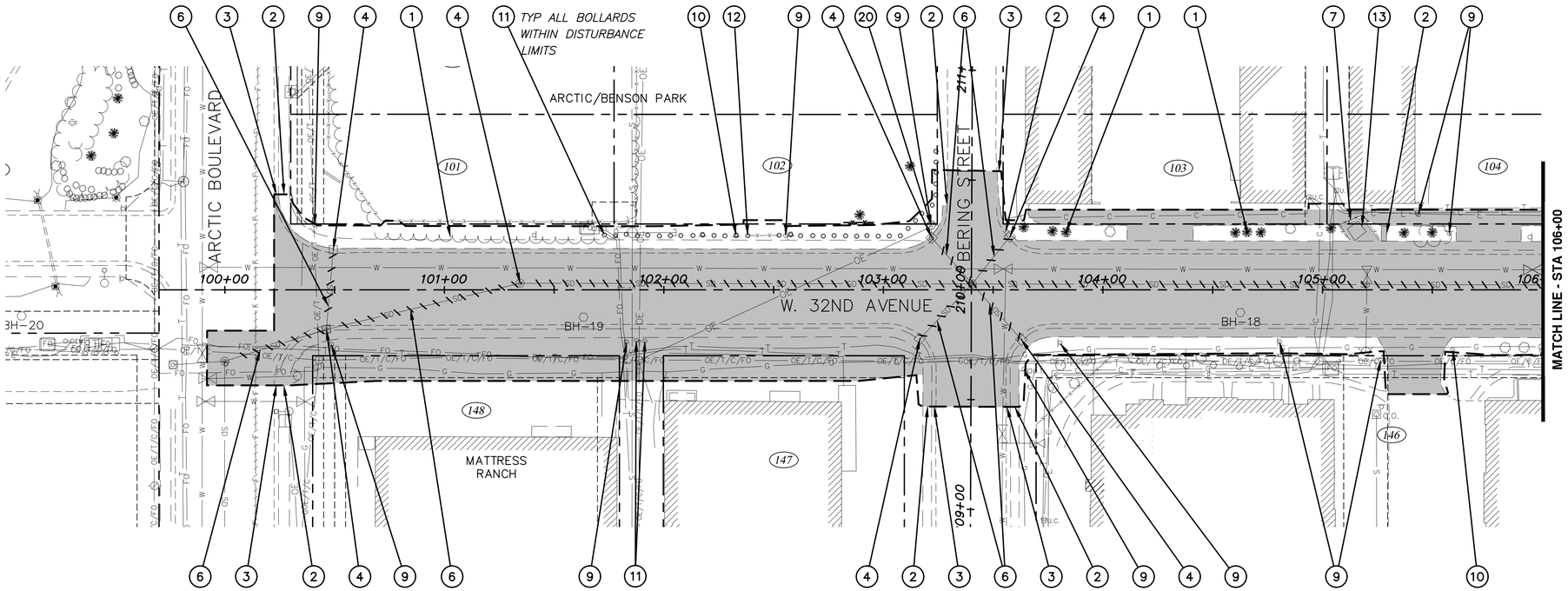


LEGEND

1. CLEAR AND GRUB WITHIN LIMITS OF DISTURBANCE AFTER CLEARING LIMITS HAVE BEEN APPROVED AND AFTER TEMPORARY TREE PROTECTION FENCES (SECTION 75.12) HAVE BEEN ESTABLISHED AS SHOWN, OR AS DIRECTED BY THE ENGINEER IN THE FIELD (SECTION 20.04). NOT ALL TREES, SHRUBS, AND VEGETATION ARE SPECIFICALLY CALLED OUT OR SHOWN.
2. REMOVE SIDEWALK OR CONCRETE APRON (SECTION 20.07).
3. REMOVE CURB AND GUTTER (SECTION 20.08).
4. REMOVE MANHOLE OR CATCH BASIN (SECTION 55.11).
5. DECOMMISSION FIRE HYDRANT ASSEMBLY (SECTION 60.08)
6. REMOVE PIPE (SECTION 70.07).
7. REMOVE AND RESET FENCE (SECTION 70.08).
8. REMOVE FENCE (SECTION 70.08).
9. REMOVE AND SALVAGE SIGN. THIS WORK SHALL BE INCIDENTAL TO THE BID ITEM STANDARD SIGNS (SECTION 70.11).
10. REMOVE AND RELOCATE SIGNS (SECTION 70.11).
11. REMOVE BOLLARD (SECTION 70.13).
12. REMOVE AND RESET BOLLARD GATE (SECTION 70.13).
13. REMOVAL/DISPOSAL AND/OR SALVAGE OF OBSTRUCTIONS (SECTION 70.22).
14. REMOVE JUNCTION BOX (SECTION 80.08).
15. REMOVE LUMINAIRE POLE (SECTION 80.28).
16. REMOVE LOAD CENTER (SECTION 80.28).
17. REMOVE SIGNAL MAST ARM OR COMBINATION POLE (SECTION 80.28).
18. REMOVE SIGNAL PEDESTAL OR PEDESTRIAN PUSHBUTTON POLE (SECTION 80.28).
19. REMOVE TRAFFIC CONTROLLER CABINET (SECTION 80.28).
20. REMOVE UTILITY POLE OR LUMINAIRE ARM (BY OTHERS).
21. PROTECT IN PLACE

REMOVAL OF PAVEMENT (SECTION 20.09) AND/OR, SIDEWALK, CURB & GUTTER, AND CONCRETE, AS SHOWN & NOTED IN SUMMARY TABLES.

APPROXIMATE LIMITS OF DISTURBANCE

REMOVE PIPE

TEMPORARY TREE PROTECTION FENCE (SECTION 75.12), LOCATIONS TO BE FIELD VERIFIED, SEE SHEET B5 FOR DETAIL.

NOTES:

1. SEE SUMMARY TABLE SHEETS B11 – B17 FOR STATION AND OFFSET OF DEMOLITION ITEMS.
2. SEE ROADWAY IMPROVEMENTS (R) SHEETS FOR DRIVEWAY RECONSTRUCTION LIMITS.
3. SEE SIGNAL & ELECTRICAL SHEETS FOR ADDITIONAL DEMO ITEMS.

**RECORD DRAWING**

1. DATA PROVIDED BY: _____ TITLE: _____
   THIS WILL SERVE TO CERTIFY THAT THESE RECORD DRAWINGS ARE A TRUE AND ACCURATE REPRESENTATION OF THE PROJECT AS CONSTRUCTED.
   CONTRACTOR: _____
   BY: _____ TITLE: _____ DATE: _____
2. DATA TRANSFERRED BY: _____ TITLE: _____
   COMPANY: _____ DATE: _____
3. BASED ON PERIODIC FIELD OBSERVATIONS BY THE ENGINEER (OR AN INDIVIDUAL UNDER HIS/HER DIRECT SUPERVISION), THE CONTRACTOR-PROVIDED DATA APPEARS TO REPRESENT THE PROJECT AS CONSTRUCTED.
   DATA TRANSFER CHECKED BY: _____ TITLE: _____
   COMPANY: _____ DATE: _____
   BY: _____

| DATA | DRAWN BY | CHECKED BY |
|---|---|---|
| BASE | TS | MJ |
| TOPOGRAPHY | BW | BW |
| PROFILE | AA | JK |
| STORM SEWER | MV | JH |
| WATER/SANITARY SEWER | CB | JK |
| GAS | CB | JK |
| TELEPHONE | CB | JK |
| ELECTRIC | JH | TK |
| DESIGN | AA | JK |
| QUANTITIES | AA | JK |
| PRELIMINARY/FINAL | AA | JK |
| MUNICIPAL/STATE | AA | JK |

PLAN CHECK

GRAPHIC 60 30 0 30 60 SCALE

| FIELD BOOKS | BM NO. | LOCATION | ELEV. |
|---|---|---|---|
| DESIGN CRW BOOK No. 149, 169, | CB 7D | See MOA Benchmark Book, Page D-56 | 94.77 |
| 195 & 196 | CB 7C | See MOA Benchmark Book, Page D-17 | 106.10 |
| STAKING | GAAB 86 | See MOA Benchmark Book, Page D-18 | 104.53 |
| | | | |
| | | | |
| ASBUILT | | | |
| CONTRACTOR | BASIS OF THIS DATUM GAAB 1972 ADJUST | | |
| INSPECTOR | | | |

CONSTRUCTION RECORD — VERTICAL DATUM

| REV | DATE | DESCRIPTION | BY |
|---|---|---|---|
| | | | |
| | | | |
| | | | |
| | | | |
| | | | |
| | | | |
| | | | |
| | | | |

REVISIONS

CRW ENGINEERING GROUP, LLC
3940 ARCTIC BLVD. SUITE 300
ANCHORAGE, ALASKA 99503
PHONE: (907) 562-3252
#AECL882-AK

CONSULTANT

STATE OF ALASKA 49TH
Justin T. Keene
CE-11775
REGISTERED PROFESSIONAL ENGINEER

SEAL

MUNICIPALITY OF ANCHORAGE

PROJECT MANAGEMENT AND ENGINEERING DEPARTMENT

16-29 W. 32ND AVENUE & E. 33RD AVENUE UPGRADES ALL
ARCTIC BOULEVARD TO OLD SEWARD HIGHWAY

DEMOLTION PLAN

ARCTIC BLVD TO STA 106+00

SCALE HOR. 1"=30' VER. N/A | GRID SW1629, SW1630, SW1631 | DATE JAN 2020 | STATUS 65% | SHEET B1 of B17

File: J:\JobsData\10138.00 W 32nd And E 33rd Avenue Upgrade\00 CADD\01 Working Set\01 Civil\01 Design\10138.00 Demolition Plan.dwg

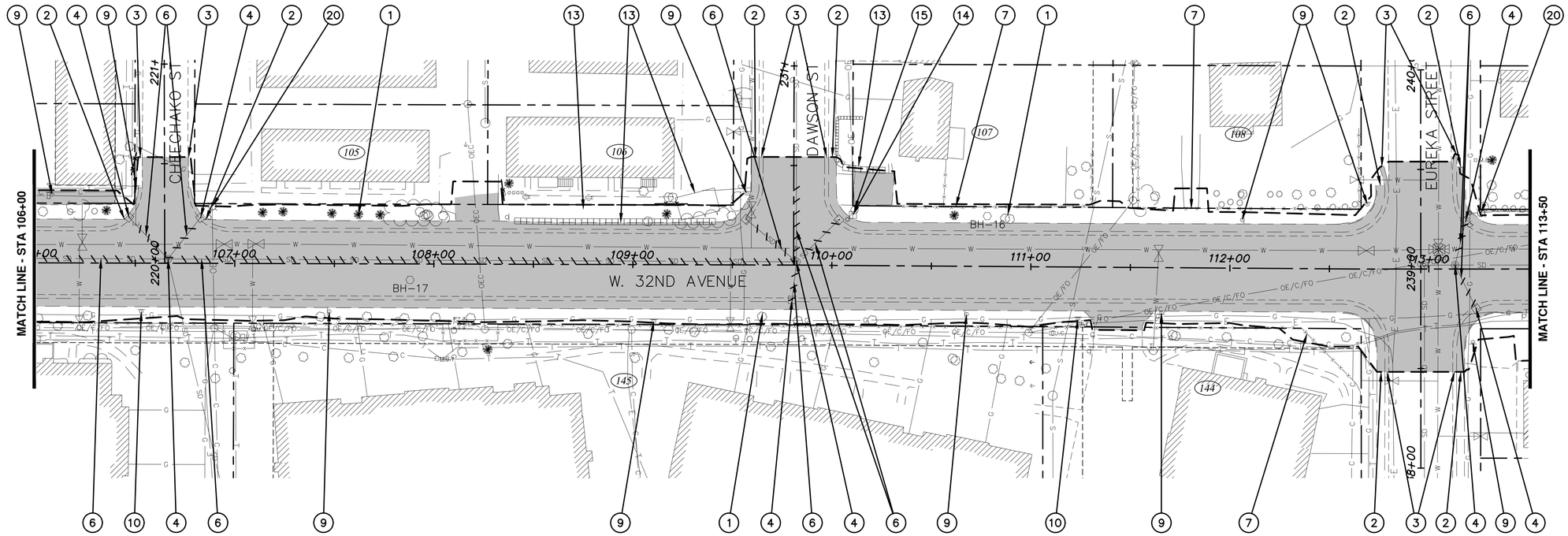


LEGEND

1. CLEAR AND GRUB WITHIN LIMITS OF DISTURBANCE AFTER CLEARING LIMITS HAVE BEEN APPROVED AND AFTER TEMPORARY TREE PROTECTION FENCES (SECTION 75.12) HAVE BEEN ESTABLISHED AS SHOWN, OR AS DIRECTED BY THE ENGINEER IN THE FIELD (SECTION 20.04). NOT ALL TREES, SHRUBS, AND VEGETATION ARE SPECIFICALLY CALLED OUT OR SHOWN.
2. REMOVE SIDEWALK OR CONCRETE APRON (SECTION 20.07).
3. REMOVE CURB AND GUTTER (SECTION 20.08).
4. REMOVE MANHOLE OR CATCH BASIN (SECTION 55.11).
5. DECOMMISSION FIRE HYDRANT ASSEMBLY (SECTION 60.08)
6. REMOVE PIPE (SECTION 70.07).
7. REMOVE AND RESET FENCE (SECTION 70.08).
8. REMOVE FENCE (SECTION 70.08).
9. REMOVE AND SALVAGE SIGN. THIS WORK SHALL BE INCIDENTAL TO THE BID ITEM STANDARD SIGNS (SECTION 70.11).
10. REMOVE AND RELOCATE SIGNS (SECTION 70.11).
11. REMOVE BOLLARD (SECTION 70.13).
12. REMOVE AND RESET BOLLARD GATE (SECTION 70.13).
13. REMOVAL/DISPOSAL AND/OR SALVAGE OF OBSTRUCTIONS (SECTION 70.22).
14. REMOVE JUNCTION BOX (SECTION 80.08).
15. REMOVE LUMINAIRE POLE (SECTION 80.28).
16. REMOVE LOAD CENTER (SECTION 80.28).
17. REMOVE SIGNAL MAST ARM OR COMBINATION POLE (SECTION 80.28).
18. REMOVE SIGNAL PEDESTAL OR PEDESTRIAN PUSHBUTTON POLE (SECTION 80.28).
19. REMOVE TRAFFIC CONTROLLER CABINET (SECTION 80.28).
20. REMOVE UTILITY POLE OR LUMINAIRE ARM (BY OTHERS).
21. PROTECT IN PLACE

REMOVAL OF PAVEMENT (SECTION 20.09) AND/OR, SIDEWALK, CURB & GUTTER, AND CONCRETE, AS SHOWN & NOTED IN SUMMARY TABLES.

APPROXIMATE LIMITS OF DISTURBANCE

REMOVE PIPE

TEMPORARY TREE PROTECTION FENCE (SECTION 75.12), LOCATIONS TO BE FIELD VERIFIED, SEE SHEET B5 FOR DETAIL.

NOTES:

1. SEE SUMMARY TABLE SHEETS B11 – B17 FOR STATION AND OFFSET OF DEMOLITION ITEMS.
2. SEE ROADWAY IMPROVEMENTS (R) SHEETS FOR DRIVEWAY RECONSTRUCTION LIMITS.
3. SEE SIGNAL & ELECTRICAL SHEETS FOR ADDITIONAL DEMO ITEMS.

**RECORD DRAWING**

1. DATA PROVIDED BY: _____ TITLE: _____
   THIS WILL SERVE TO CERTIFY THAT THESE RECORD DRAWINGS ARE A TRUE AND ACCURATE REPRESENTATION OF THE PROJECT AS CONSTRUCTED.
   CONTRACTOR: _____
   BY: _____ TITLE: _____ DATE: _____
2. DATA TRANSFERRED BY: _____ TITLE: _____
   COMPANY: _____ DATE: _____
3. BASED ON PERIODIC FIELD OBSERVATIONS BY THE ENGINEER (OR AN INDIVIDUAL UNDER HIS/HER DIRECT SUPERVISION), THE CONTRACTOR-PROVIDED DATA APPEARS TO REPRESENT THE PROJECT AS CONSTRUCTED.
   DATA TRANSFER CHECKED BY: _____ TITLE: _____
   COMPANY: _____ DATE: _____
   BY: _____

| DATA | DRAWN BY | CHECKED BY |
|---|---|---|
| BASE | TS | MJ |
| TOPOGRAPHY | BW | BW |
| PROFILE | AA | JK |
| STORM SEWER | MV | JH |
| WATER/SANITARY SEWER | CB | JK |
| GAS | CB | JK |
| TELEPHONE | CB | JK |
| ELECTRIC | JH | TK |
| DESIGN | AA | JK |
| QUANTITIES | AA | JK |
| PRELIMINARY/FINAL | AA | JK |
| MUNICIPAL/STATE | AA | JK |

PLAN CHECK

GRAPHIC 60 30 0 30 60 SCALE

| FIELD BOOKS | BM NO. | LOCATION | ELEV. |
|---|---|---|---|
| DESIGN CRW BOOK No. 149, 169, | CB 7D | See MOA Benchmark Book, Page D-56 | 94.77 |
| 195 & 196 | CB 7C | See MOA Benchmark Book, Page D-17 | 106.10 |
| STAKING | GAAB 86 | See MOA Benchmark Book, Page D-18 | 104.53 |
| | | | |
| | | | |
| ASBUILT | | | |
| CONTRACTOR | BASIS OF THIS DATUM GAAB 1972 ADJUST | | |
| INSPECTOR | | | |

CONSTRUCTION RECORD — VERTICAL DATUM

| REV | DATE | DESCRIPTION | BY |
|---|---|---|---|
| | | | |
| | | | |
| | | | |
| | | | |
| | | | |
| | | | |
| | | | |
| | | | |

REVISIONS

CRW ENGINEERING GROUP, LLC
3940 ARCTIC BLVD. SUITE 300
ANCHORAGE, ALASKA 99503
PHONE: (907) 562-3252
#AECL882-AK

CONSULTANT

STATE OF ALASKA 49TH
Justin T. Keene
CE-11775
REGISTERED PROFESSIONAL ENGINEER

SEAL

MUNICIPALITY OF ANCHORAGE

PROJECT MANAGEMENT AND ENGINEERING DEPARTMENT

16-29 W. 32ND AVENUE & E. 33RD AVENUE UPGRADES ALL
ARCTIC BOULEVARD TO OLD SEWARD HIGHWAY

DEMOLTION PLAN

STA 106+00 TO STA 113+50

SCALE HOR. N/A VER. 1"=30'
GRID SW1629, SW1630, SW1631
DATE JAN 2020
STATUS 65%
SHEET B2 of B17

File: J:\JobsData\10138.00 W 32nd And E 33rd Avenue Upgrade\00 CADD\01 Working Set\01 Civil\01 Design\10138.00 Demolition Plan.dwg

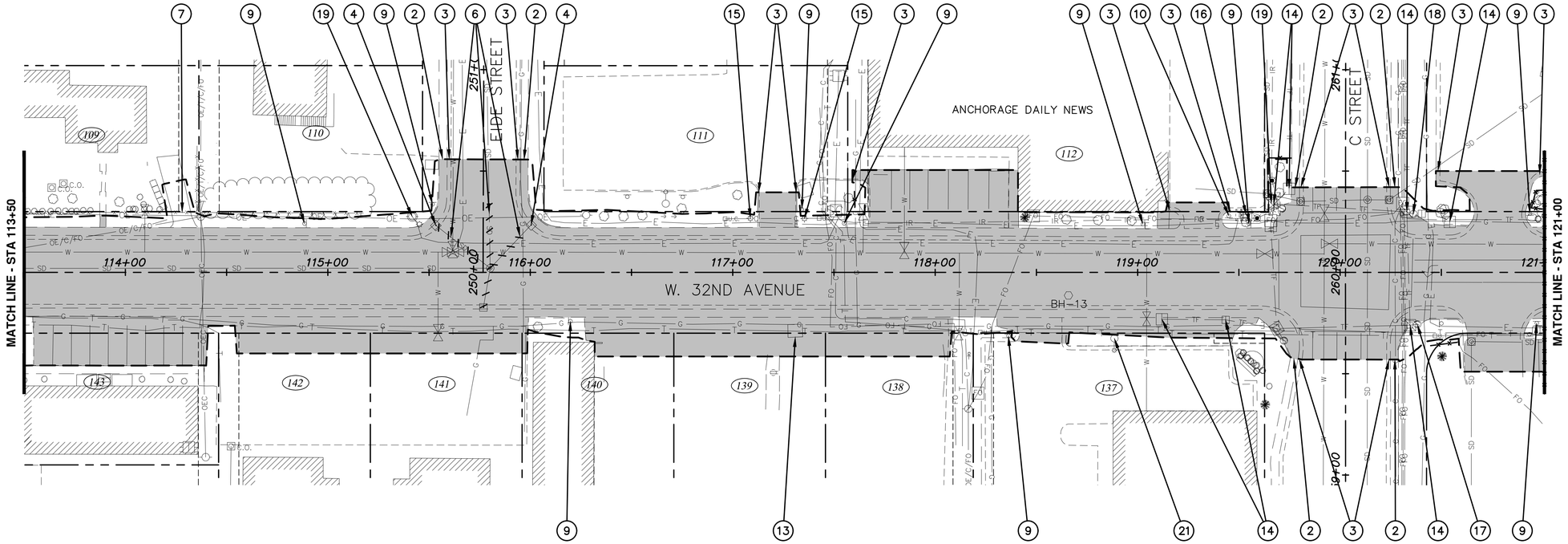


LEGEND

1. CLEAR AND GRUB WITHIN LIMITS OF DISTURBANCE AFTER CLEARING LIMITS HAVE BEEN APPROVED AND AFTER TEMPORARY TREE PROTECTION FENCES (SECTION 75.12) HAVE BEEN ESTABLISHED AS SHOWN, OR AS DIRECTED BY THE ENGINEER IN THE FIELD (SECTION 20.04). NOT ALL TREES, SHRUBS, AND VEGETATION ARE SPECIFICALLY CALLED OUT OR SHOWN.
2. REMOVE SIDEWALK OR CONCRETE APRON (SECTION 20.07).
3. REMOVE CURB AND GUTTER (SECTION 20.08).
4. REMOVE MANHOLE OR CATCH BASIN (SECTION 55.11).
5. DECOMMISSION FIRE HYDRANT ASSEMBLY (SECTION 60.08)
6. REMOVE PIPE (SECTION 70.07).
7. REMOVE AND RESET FENCE (SECTION 70.08).
8. REMOVE FENCE (SECTION 70.08).
9. REMOVE AND SALVAGE SIGN. THIS WORK SHALL BE INCIDENTAL TO THE BID ITEM STANDARD SIGNS (SECTION 70.11).
10. REMOVE AND RELOCATE SIGNS (SECTION 70.11).
11. REMOVE BOLLARD (SECTION 70.13).
12. REMOVE AND RESET BOLLARD GATE (SECTION 70.13).
13. REMOVAL/DISPOSAL AND/OR SALVAGE OF OBSTRUCTIONS (SECTION 70.22).
14. REMOVE JUNCTION BOX (SECTION 80.08).
15. REMOVE LUMINAIRE POLE (SECTION 80.28).
16. REMOVE LOAD CENTER (SECTION 80.28).
17. REMOVE SIGNAL MAST ARM OR COMBINATION POLE (SECTION 80.28).
18. REMOVE SIGNAL PEDESTAL OR PEDESTRIAN PUSHBUTTON POLE (SECTION 80.28).
19. REMOVE TRAFFIC CONTROLLER CABINET (SECTION 80.28).
20. REMOVE UTILITY POLE OR LUMINAIRE ARM (BY OTHERS).
21. PROTECT IN PLACE

REMOVAL OF PAVEMENT (SECTION 20.09) AND/OR, SIDEWALK, CURB & GUTTER, AND CONCRETE, AS SHOWN & NOTED IN SUMMARY TABLES.

APPROXIMATE LIMITS OF DISTURBANCE

REMOVE PIPE

TEMPORARY TREE PROTECTION FENCE (SECTION 75.12), LOCATIONS TO BE FIELD VERIFIED, SEE SHEET B5 FOR DETAIL.

NOTES:

1. SEE SUMMARY TABLE SHEETS B11 – B17 FOR STATION AND OFFSET OF DEMOLITION ITEMS.
2. SEE ROADWAY IMPROVEMENTS (R) SHEETS FOR DRIVEWAY RECONSTRUCTION LIMITS.
3. SEE SIGNAL & ELECTRICAL SHEETS FOR ADDITIONAL DEMO ITEMS.

**RECORD DRAWING**

1. DATA PROVIDED BY: _____ TITLE: _____
   THIS WILL SERVE TO CERTIFY THAT THESE RECORD DRAWINGS ARE A TRUE AND ACCURATE REPRESENTATION OF THE PROJECT AS CONSTRUCTED.
   CONTRACTOR: _____
   BY: _____ TITLE: _____ DATE: _____
2. DATA TRANSFERRED BY: _____ TITLE: _____
   COMPANY: _____ DATE: _____
3. BASED ON PERIODIC FIELD OBSERVATIONS BY THE ENGINEER (OR AN INDIVIDUAL UNDER HIS/HER DIRECT SUPERVISION), THE CONTRACTOR-PROVIDED DATA APPEARS TO REPRESENT THE PROJECT AS CONSTRUCTED.
   DATA TRANSFER CHECKED BY: _____ TITLE: _____
   COMPANY: _____ DATE: _____
   BY: _____

| DATA | DRAWN BY | CHECKED BY |
|---|---|---|
| BASE | TS | MJ |
| TOPOGRAPHY | BW | BW |
| PROFILE | AA | JK |
| STORM SEWER | MV | JH |
| WATER/SANITARY SEWER | CB | JK |
| GAS | CB | JK |
| TELEPHONE | CB | JK |
| ELECTRIC | JH | TK |
| DESIGN | AA | JK |
| QUANTITIES | AA | JK |
| PRELIMINARY/FINAL | AA | JK |
| MUNICIPAL/STATE | AA | JK |

PLAN CHECK

GRAPHIC 60 30 0 30 60 SCALE

| FIELD BOOKS | BM NO. | LOCATION | ELEV. |
|---|---|---|---|
| DESIGN CRW BOOK No. 149, 169, | CB 7D | See MOA Benchmark Book, Page D-56 | 94.77 |
| 195 & 196 | CB 7C | See MOA Benchmark Book, Page D-17 | 106.10 |
| STAKING | GAAB 86 | See MOA Benchmark Book, Page D-18 | 104.53 |
| | | | |
| | | | |
| ASBUILT | | | |
| CONTRACTOR | BASIS OF THIS DATUM GAAB 1972 ADJUST | | |
| INSPECTOR | | | |

CONSTRUCTION RECORD — VERTICAL DATUM

| REV | DATE | DESCRIPTION | BY |
|---|---|---|---|
| | | | |
| | | | |
| | | | |
| | | | |
| | | | |
| | | | |
| | | | |
| | | | |

REVISIONS

CRW ENGINEERING GROUP, LLC
3940 ARCTIC BLVD. SUITE 300
ANCHORAGE, ALASKA 99503
PHONE: (907) 562-3252
#AECL882-AK

CONSULTANT

STATE OF ALASKA 49TH
Justin T. Keene
CE-11775
REGISTERED PROFESSIONAL ENGINEER

SEAL

MUNICIPALITY OF ANCHORAGE

PROJECT MANAGEMENT AND ENGINEERING DEPARTMENT

16-29 W. 32ND AVENUE & E. 33RD AVENUE UPGRADES ALL
ARCTIC BOULEVARD TO OLD SEWARD HIGHWAY

DEMOLTION PLAN

STA 113+50 TO STA 121+00

SCALE HOR. 1"=30' VER. N/A | GRID SW1629, SW1630, SW1631 | DATE JAN 2020 | STATUS 65% | SHEET B3 of B17

File: J:\JobsData\10138.00 W 32nd And E 33rd Avenue Upgrade\00 CADD\01 Working Set\01 Civil\01 Design\10138.00 Demolition Plan.dwg

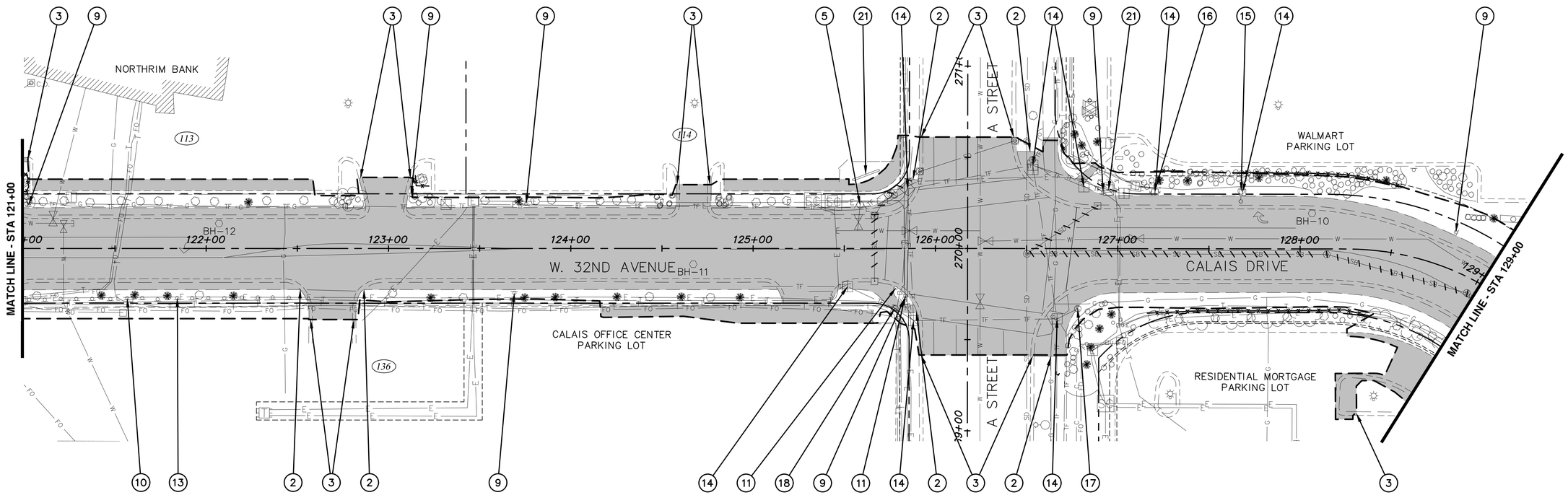


LEGEND

1. CLEAR AND GRUB WITHIN LIMITS OF DISTURBANCE AFTER CLEARING LIMITS HAVE BEEN APPROVED AND AFTER TEMPORARY TREE PROTECTION FENCES (SECTION 75.12) HAVE BEEN ESTABLISHED AS SHOWN, OR AS DIRECTED BY THE ENGINEER IN THE FIELD (SECTION 20.04). NOT ALL TREES, SHRUBS, AND VEGETATION ARE SPECIFICALLY CALLED OUT OR SHOWN.
2. REMOVE SIDEWALK OR CONCRETE APRON (SECTION 20.07).
3. REMOVE CURB AND GUTTER (SECTION 20.08).
4. REMOVE MANHOLE OR CATCH BASIN (SECTION 55.11).
5. DECOMMISSION FIRE HYDRANT ASSEMBLY (SECTION 60.08)
6. REMOVE PIPE (SECTION 70.07).
7. REMOVE AND RESET FENCE (SECTION 70.08).
8. REMOVE FENCE (SECTION 70.08).
9. REMOVE AND SALVAGE SIGN. THIS WORK SHALL BE INCIDENTAL TO THE BID ITEM STANDARD SIGNS (SECTION 70.11).
10. REMOVE AND RELOCATE SIGNS (SECTION 70.11).
11. REMOVE BOLLARD (SECTION 70.13).
12. REMOVE AND RESET BOLLARD GATE (SECTION 70.13).
13. REMOVAL/DISPOSAL AND/OR SALVAGE OF OBSTRUCTIONS (SECTION 70.22).
14. REMOVE JUNCTION BOX (SECTION 80.08).
15. REMOVE LUMINAIRE POLE (SECTION 80.28).
16. REMOVE LOAD CENTER (SECTION 80.28).
17. REMOVE SIGNAL MAST ARM OR COMBINATION POLE (SECTION 80.28).
18. REMOVE SIGNAL PEDESTAL OR PEDESTRIAN PUSHBUTTON POLE (SECTION 80.28).
19. REMOVE TRAFFIC CONTROLLER CABINET (SECTION 80.28).
20. REMOVE UTILITY POLE OR LUMINAIRE ARM (BY OTHERS).
21. PROTECT IN PLACE

REMOVAL OF PAVEMENT (SECTION 20.09) AND/OR, SIDEWALK, CURB & GUTTER, AND CONCRETE, AS SHOWN & NOTED IN SUMMARY TABLES.

APPROXIMATE LIMITS OF DISTURBANCE

REMOVE PIPE

TEMPORARY TREE PROTECTION FENCE (SECTION 75.12), LOCATIONS TO BE FIELD VERIFIED, SEE SHEET B5 FOR DETAIL.

NOTES:

1. SEE SUMMARY TABLE SHEETS B11 – B17 FOR STATION AND OFFSET OF DEMOLITION ITEMS.
2. SEE ROADWAY IMPROVEMENTS (R) SHEETS FOR DRIVEWAY RECONSTRUCTION LIMITS.
3. SEE SIGNAL & ELECTRICAL SHEETS FOR ADDITIONAL DEMO ITEMS.

**RECORD DRAWING**

1. DATA PROVIDED BY: _____ TITLE: _____
   THIS WILL SERVE TO CERTIFY THAT THESE RECORD DRAWINGS ARE A TRUE AND ACCURATE REPRESENTATION OF THE PROJECT AS CONSTRUCTED.
   CONTRACTOR: _____
   BY: _____ TITLE: _____ DATE: _____
2. DATA TRANSFERRED BY: _____ TITLE: _____
   COMPANY: _____ DATE: _____
3. BASED ON PERIODIC FIELD OBSERVATIONS BY THE ENGINEER (OR AN INDIVIDUAL UNDER HIS/HER DIRECT SUPERVISION), THE CONTRACTOR-PROVIDED DATA APPEARS TO REPRESENT THE PROJECT AS CONSTRUCTED.
   DATA TRANSFER CHECKED BY: _____ TITLE: _____
   COMPANY: _____ DATE: _____
   BY: _____

| DATA | DRAWN BY | CHECKED BY |
|---|---|---|
| BASE | TS | MJ |
| TOPOGRAPHY | BW | BW |
| PROFILE | AA | JK |
| STORM SEWER | MV | JH |
| WATER/SANITARY SEWER | CB | JK |
| GAS | CB | JK |
| TELEPHONE | CB | JK |
| ELECTRIC | JH | TK |
| DESIGN | AA | JK |
| QUANTITIES | AA | JK |
| PRELIMINARY/FINAL | AA | JK |
| MUNICIPAL/STATE | AA | JK |

PLAN CHECK

GRAPHIC 60 30 0 30 60 SCALE

| FIELD BOOKS | BM NO. | LOCATION | ELEV. |
|---|---|---|---|
| DESIGN CRW BOOK No. 149, 169, | CB 7D | See MOA Benchmark Book, Page D-56 | 94.77 |
| 195 & 196 | CB 7C | See MOA Benchmark Book, Page D-17 | 106.10 |
| STAKING | GAAB 86 | See MOA Benchmark Book, Page D-18 | 104.53 |
| | | | |
| | | | |
| ASBUILT | | | |
| CONTRACTOR | BASIS OF THIS DATUM GAAB 1972 ADJUST | | |
| INSPECTOR | | | |

CONSTRUCTION RECORD — VERTICAL DATUM

| REV | DATE | DESCRIPTION | BY |
|---|---|---|---|
| | | | |
| | | | |
| | | | |
| | | | |
| | | | |
| | | | |
| | | | |
| | | | |

REVISIONS

CRW ENGINEERING GROUP, LLC
3940 ARCTIC BLVD. SUITE 300
ANCHORAGE, ALASKA 99503
PHONE: (907) 562-3252
#AECL882-AK

CONSULTANT

STATE OF ALASKA 49TH
Justin T. Keene
CE-11775
REGISTERED PROFESSIONAL ENGINEER

SEAL

MUNICIPALITY OF ANCHORAGE

PROJECT MANAGEMENT AND ENGINEERING DEPARTMENT

16-29 W. 32ND AVENUE & E. 33RD AVENUE UPGRADES ALL
ARCTIC BOULEVARD TO OLD SEWARD HIGHWAY

DEMOLTION PLAN

STA 121+00 TO STA 129+00

SCALE HOR. 1"=30' VER. N/A | GRID SW1629, SW1630, SW1631 | DATE JAN 2020 | STATUS 65% | SHEET B4 of B17

File: J:\JobsData\10138.00 W 32nd And E 33rd Avenue Upgrade\00 CADD\01 Working Set\01 Civil\01 Design\10138.00 Demolition Plan.dwg

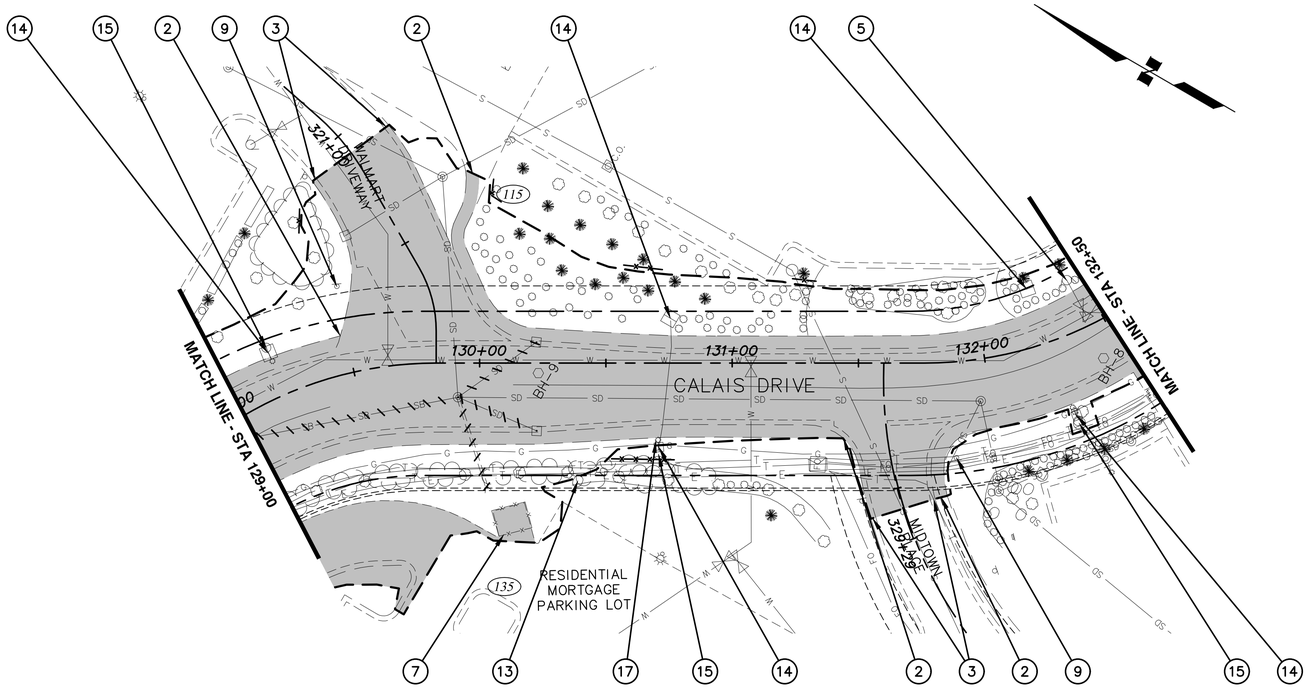


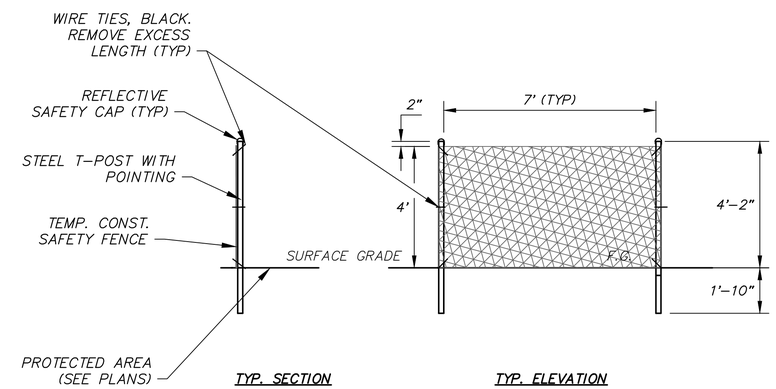


1 **TEMPORARY TREE PROTECTION FENCE DETAIL**

SCALE: NTS

LEGEND

1. CLEAR AND GRUB WITHIN LIMITS OF DISTURBANCE AFTER CLEARING LIMITS HAVE BEEN APPROVED AND AFTER TEMPORARY TREE PROTECTION FENCES (SECTION 75.12) HAVE BEEN ESTABLISHED AS SHOWN, OR AS DIRECTED BY THE ENGINEER IN THE FIELD (SECTION 20.04). NOT ALL TREES, SHRUBS, AND VEGETATION ARE SPECIFICALLY CALLED OUT OR SHOWN.
2. REMOVE SIDEWALK OR CONCRETE APRON (SECTION 20.07).
3. REMOVE CURB AND GUTTER (SECTION 20.08).
4. REMOVE MANHOLE OR CATCH BASIN (SECTION 55.11).
5. DECOMMISSION FIRE HYDRANT ASSEMBLY (SECTION 60.08)
6. REMOVE PIPE (SECTION 70.07).
7. REMOVE AND RESET FENCE (SECTION 70.08).
8. REMOVE FENCE (SECTION 70.08).
9. REMOVE AND SALVAGE SIGN. THIS WORK SHALL BE INCIDENTAL TO THE BID ITEM STANDARD SIGNS (SECTION 70.11).
10. REMOVE AND RELOCATE SIGNS (SECTION 70.11).
11. REMOVE BOLLARD (SECTION 70.13).
12. REMOVE AND RESET BOLLARD GATE (SECTION 70.13).
13. REMOVAL/DISPOSAL AND/OR SALVAGE OF OBSTRUCTIONS (SECTION 70.22).
14. REMOVE JUNCTION BOX (SECTION 80.08).
15. REMOVE LUMINAIRE POLE (SECTION 80.28).
16. REMOVE LOAD CENTER (SECTION 80.28).
17. REMOVE SIGNAL MAST ARM OR COMBINATION POLE (SECTION 80.28).
18. REMOVE SIGNAL PEDESTAL OR PEDESTRIAN PUSHBUTTON POLE (SECTION 80.28).
19. REMOVE TRAFFIC CONTROLLER CABINET (SECTION 80.28).
20. REMOVE UTILITY POLE OR LUMINAIRE ARM (BY OTHERS).
21. PROTECT IN PLACE

REMOVAL OF PAVEMENT (SECTION 20.09) AND/OR, SIDEWALK, CURB & GUTTER, AND CONCRETE, AS SHOWN & NOTED IN SUMMARY TABLES.

APPROXIMATE LIMITS OF DISTURBANCE

REMOVE PIPE

TEMPORARY TREE PROTECTION FENCE (SECTION 75.12), LOCATIONS TO BE FIELD VERIFIED, SEE SHEET B5 FOR DETAIL.

NOTES:

1. SEE SUMMARY TABLE SHEETS B11 – B17 FOR STATION AND OFFSET OF DEMOLITION ITEMS.
2. SEE ROADWAY IMPROVEMENTS (R) SHEETS FOR DRIVEWAY RECONSTRUCTION LIMITS.
3. SEE SIGNAL & ELECTRICAL SHEETS FOR ADDITIONAL DEMO ITEMS.

**RECORD DRAWING**

1. DATA PROVIDED BY: _____ TITLE: _____
   THIS WILL SERVE TO CERTIFY THAT THESE RECORD DRAWINGS ARE A TRUE AND ACCURATE REPRESENTATION OF THE PROJECT AS CONSTRUCTED.
   CONTRACTOR: _____
   BY: _____ TITLE: _____ DATE: _____
2. DATA TRANSFERRED BY: _____ TITLE: _____
   COMPANY: _____ DATE: _____
3. BASED ON PERIODIC FIELD OBSERVATIONS BY THE ENGINEER (OR AN INDIVIDUAL UNDER HIS/HER DIRECT SUPERVISION), THE CONTRACTOR-PROVIDED DATA APPEARS TO REPRESENT THE PROJECT AS CONSTRUCTED.
   DATA TRANSFER CHECKED BY: _____ TITLE: _____
   COMPANY: _____ DATE: _____
   BY: _____

| DATA | DRAWN BY | CHECKED BY |
|---|---|---|
| BASE | TS | MJ |
| TOPOGRAPHY | BW | BW |
| PROFILE | AA | JK |
| STORM SEWER | MV | JH |
| WATER/SANITARY SEWER | CB | JK |
| GAS | CB | JK |
| TELEPHONE | CB | JK |
| ELECTRIC | JH | TK |
| DESIGN | AA | JK |
| QUANTITIES | AA | JK |
| PRELIMINARY/FINAL | AA | JK |
| MUNICIPAL/STATE | AA | JK |

PLAN CHECK

GRAPHIC 60 30 0 30 60 SCALE

| FIELD BOOKS | BM NO. | LOCATION | ELEV. |
|---|---|---|---|
| DESIGN CRW BOOK No. 149, 169, | CB 7D | See MOA Benchmark Book, Page D-56 | 94.77 |
| 195 & 196 | CB 7C | See MOA Benchmark Book, Page D-17 | 106.10 |
| STAKING | GAAB 86 | See MOA Benchmark Book, Page D-18 | 104.53 |
| | | | |
| ASBUILT | | | |
| CONTRACTOR | BASIS OF THIS DATUM GAAB 1972 ADJUST | | |
| INSPECTOR | | | |

CONSTRUCTION RECORD — VERTICAL DATUM

| REV | DATE | DESCRIPTION | BY |
|---|---|---|---|
| | | | |

REVISIONS

CRW ENGINEERING GROUP, LLC
3940 ARCTIC BLVD. SUITE 300
ANCHORAGE, ALASKA 99503
PHONE: (907) 562-3252
#AECL882-AK

CONSULTANT

STATE OF ALASKA 49TH
Justin T. Keene
CE-11775
REGISTERED PROFESSIONAL ENGINEER

SEAL

MUNICIPALITY OF ANCHORAGE

PROJECT MANAGEMENT AND ENGINEERING DEPARTMENT

16-29 W. 32ND AVENUE & E. 33RD AVENUE UPGRADES ALL
ARCTIC BOULEVARD TO OLD SEWARD HIGHWAY

DEMOLTION PLAN

STA 129+00 TO STA 132+50

SCALE HOR. 1"=30' VER. N/A | GRID SW1629, SW1630, SW1631 | DATE JAN 2020 | STATUS 65% | SHEET B5 of B17

File: J:\JobsData\10138.00 W 32nd And E 33rd Avenue Upgrade\00 CADD\01 Working Set\01 Civil\01 Design\10138.00 Demolition Plan.dwg

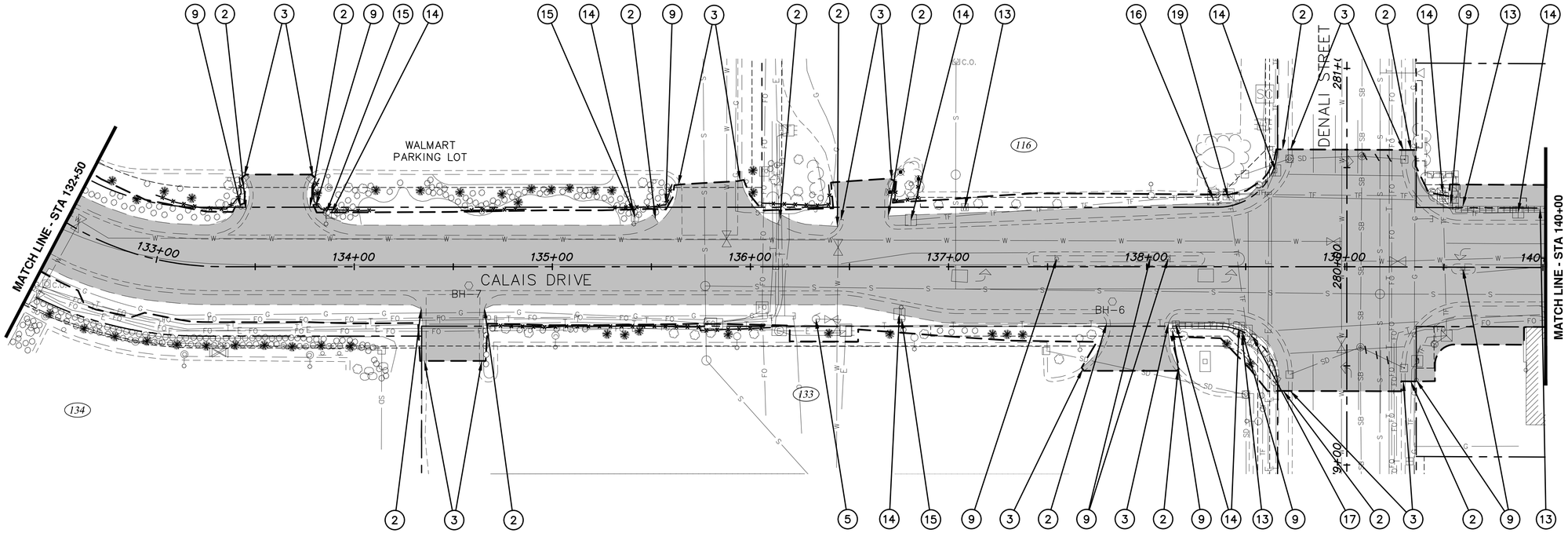


LEGEND

1. CLEAR AND GRUB WITHIN LIMITS OF DISTURBANCE AFTER CLEARING LIMITS HAVE BEEN APPROVED AND AFTER TEMPORARY TREE PROTECTION FENCES (SECTION 75.12) HAVE BEEN ESTABLISHED AS SHOWN, OR AS DIRECTED BY THE ENGINEER IN THE FIELD (SECTION 20.04). NOT ALL TREES, SHRUBS, AND VEGETATION ARE SPECIFICALLY CALLED OUT OR SHOWN.
2. REMOVE SIDEWALK OR CONCRETE APRON (SECTION 20.07).
3. REMOVE CURB AND GUTTER (SECTION 20.08).
4. REMOVE MANHOLE OR CATCH BASIN (SECTION 55.11).
5. DECOMMISSION FIRE HYDRANT ASSEMBLY (SECTION 60.08)
6. REMOVE PIPE (SECTION 70.07).
7. REMOVE AND RESET FENCE (SECTION 70.08).
8. REMOVE FENCE (SECTION 70.08).
9. REMOVE AND SALVAGE SIGN. THIS WORK SHALL BE INCIDENTAL TO THE BID ITEM STANDARD SIGNS (SECTION 70.11).
10. REMOVE AND RELOCATE SIGNS (SECTION 70.11).
11. REMOVE BOLLARD (SECTION 70.13).
12. REMOVE AND RESET BOLLARD GATE (SECTION 70.13).
13. REMOVAL/DISPOSAL AND/OR SALVAGE OF OBSTRUCTIONS (SECTION 70.22).
14. REMOVE JUNCTION BOX (SECTION 80.08).
15. REMOVE LUMINAIRE POLE (SECTION 80.28).
16. REMOVE LOAD CENTER (SECTION 80.28).
17. REMOVE SIGNAL MAST ARM OR COMBINATION POLE (SECTION 80.28).
18. REMOVE SIGNAL PEDESTAL OR PEDESTRIAN PUSHBUTTON POLE (SECTION 80.28).
19. REMOVE TRAFFIC CONTROLLER CABINET (SECTION 80.28).
20. REMOVE UTILITY POLE OR LUMINAIRE ARM (BY OTHERS).
21. PROTECT IN PLACE

REMOVAL OF PAVEMENT (SECTION 20.09) AND/OR, SIDEWALK, CURB & GUTTER, AND CONCRETE, AS SHOWN & NOTED IN SUMMARY TABLES.

APPROXIMATE LIMITS OF DISTURBANCE

REMOVE PIPE

TEMPORARY TREE PROTECTION FENCE (SECTION 75.12), LOCATIONS TO BE FIELD VERIFIED, SEE SHEET B5 FOR DETAIL.

NOTES:

1. SEE SUMMARY TABLE SHEETS B11 – B17 FOR STATION AND OFFSET OF DEMOLITION ITEMS.
2. SEE ROADWAY IMPROVEMENTS (R) SHEETS FOR DRIVEWAY RECONSTRUCTION LIMITS.
3. SEE SIGNAL & ELECTRICAL SHEETS FOR ADDITIONAL DEMO ITEMS.

**RECORD DRAWING**

1. DATA PROVIDED BY: _____ TITLE: _____
   THIS WILL SERVE TO CERTIFY THAT THESE RECORD DRAWINGS ARE A TRUE AND ACCURATE REPRESENTATION OF THE PROJECT AS CONSTRUCTED.
   CONTRACTOR: _____
   BY: _____ TITLE: _____ DATE: _____
2. DATA TRANSFERRED BY: _____ TITLE: _____
   COMPANY: _____ DATE: _____
3. BASED ON PERIODIC FIELD OBSERVATIONS BY THE ENGINEER (OR AN INDIVIDUAL UNDER HIS/HER DIRECT SUPERVISION), THE CONTRACTOR-PROVIDED DATA APPEARS TO REPRESENT THE PROJECT AS CONSTRUCTED.
   DATA TRANSFER CHECKED BY: _____ TITLE: _____
   COMPANY: _____ DATE: _____
   BY: _____

| DATA | DRAWN BY | CHECKED BY |
|---|---|---|
| BASE | TS | MJ |
| TOPOGRAPHY | BW | BW |
| PROFILE | AA | JK |
| STORM SEWER | MV | JH |
| WATER/SANITARY SEWER | CB | JK |
| GAS | CB | JK |
| TELEPHONE | CB | JK |
| ELECTRIC | JH | TK |
| DESIGN | AA | JK |
| QUANTITIES | AA | JK |
| PRELIMINARY/FINAL | AA | JK |
| MUNICIPAL/STATE | AA | JK |

PLAN CHECK

GRAPHIC 60 30 0 30 60 SCALE

| FIELD BOOKS | BM NO. | LOCATION | ELEV. |
|---|---|---|---|
| DESIGN CRW BOOK No. 149, 169, | CB 7D | See MOA Benchmark Book, Page D-56 | 94.77 |
| 195 & 196 | CB 7C | See MOA Benchmark Book, Page D-17 | 106.10 |
| STAKING | GAAB 86 | See MOA Benchmark Book, Page D-18 | 104.53 |
| | | | |
| | | | |
| ASBUILT | | | |
| CONTRACTOR | BASIS OF THIS DATUM GAAB 1972 ADJUST | | |
| INSPECTOR | | | |

CONSTRUCTION RECORD — VERTICAL DATUM

| REV | DATE | DESCRIPTION | BY |
|---|---|---|---|
| | | | |
| | | | |
| | | | |
| | | | |
| | | | |
| | | | |
| | | | |
| | | | |

REVISIONS

CRW ENGINEERING GROUP, LLC
3940 ARCTIC BLVD. SUITE 300
ANCHORAGE, ALASKA 99503
PHONE: (907) 562-3252
#AECL882-AK

CONSULTANT

STATE OF ALASKA 49TH
Justin T. Keene
CE-11775
REGISTERED PROFESSIONAL ENGINEER

SEAL

MUNICIPALITY OF ANCHORAGE

PROJECT MANAGEMENT AND ENGINEERING DEPARTMENT

16-29 W. 32ND AVENUE & E. 33RD AVENUE UPGRADES ALL
ARCTIC BOULEVARD TO OLD SEWARD HIGHWAY

DEMOLTION PLAN

STA 132+50 TO STA 140+00

SCALE HOR. 1"=30' VER. N/A | GRID SW1629, SW1630, SW1631 | DATE JAN 2020 | STATUS 65% | SHEET B6 of B17

File: J:\JobsData\10138.00 W 32nd And E 33rd Avenue Upgrade\00 CADD\01 Working Set\01 Civil\01 Design\10138.00 Demolition Plan.dwg

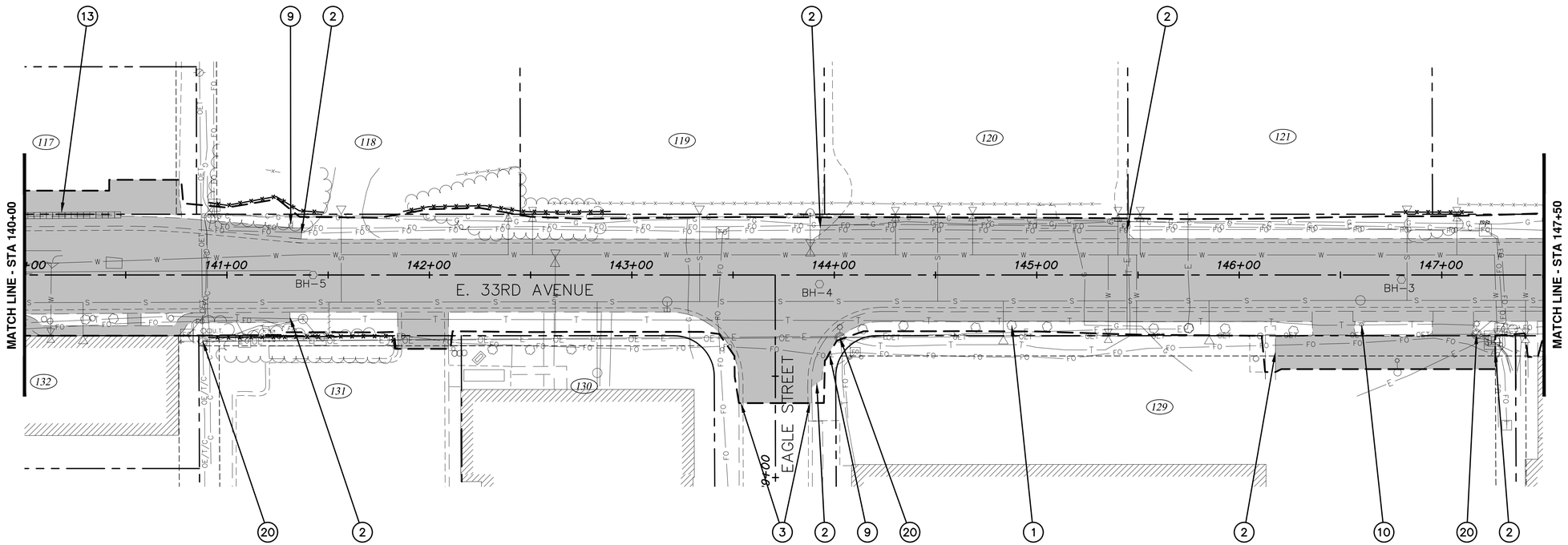


LEGEND

1. CLEAR AND GRUB WITHIN LIMITS OF DISTURBANCE AFTER CLEARING LIMITS HAVE BEEN APPROVED AND AFTER TEMPORARY TREE PROTECTION FENCES (SECTION 75.12) HAVE BEEN ESTABLISHED AS SHOWN, OR AS DIRECTED BY THE ENGINEER IN THE FIELD (SECTION 20.04). NOT ALL TREES, SHRUBS, AND VEGETATION ARE SPECIFICALLY CALLED OUT OR SHOWN.
2. REMOVE SIDEWALK OR CONCRETE APRON (SECTION 20.07).
3. REMOVE CURB AND GUTTER (SECTION 20.08).
4. REMOVE MANHOLE OR CATCH BASIN (SECTION 55.11).
5. DECOMMISSION FIRE HYDRANT ASSEMBLY (SECTION 60.08)
6. REMOVE PIPE (SECTION 70.07).
7. REMOVE AND RESET FENCE (SECTION 70.08).
8. REMOVE FENCE (SECTION 70.08).
9. REMOVE AND SALVAGE SIGN. THIS WORK SHALL BE INCIDENTAL TO THE BID ITEM STANDARD SIGNS (SECTION 70.11).
10. REMOVE AND RELOCATE SIGNS (SECTION 70.11).
11. REMOVE BOLLARD (SECTION 70.13).
12. REMOVE AND RESET BOLLARD GATE (SECTION 70.13).
13. REMOVAL/DISPOSAL AND/OR SALVAGE OF OBSTRUCTIONS (SECTION 70.22).
14. REMOVE JUNCTION BOX (SECTION 80.08).
15. REMOVE LUMINAIRE POLE (SECTION 80.28).
16. REMOVE LOAD CENTER (SECTION 80.28).
17. REMOVE SIGNAL MAST ARM OR COMBINATION POLE (SECTION 80.28).
18. REMOVE SIGNAL PEDESTAL OR PEDESTRIAN PUSHBUTTON POLE (SECTION 80.28).
19. REMOVE TRAFFIC CONTROLLER CABINET (SECTION 80.28).
20. REMOVE UTILITY POLE OR LUMINAIRE ARM (BY OTHERS).
21. PROTECT IN PLACE

REMOVAL OF PAVEMENT (SECTION 20.09) AND/OR, SIDEWALK, CURB & GUTTER, AND CONCRETE, AS SHOWN & NOTED IN SUMMARY TABLES.

APPROXIMATE LIMITS OF DISTURBANCE

REMOVE PIPE

TEMPORARY TREE PROTECTION FENCE (SECTION 75.12), LOCATIONS TO BE FIELD VERIFIED, SEE SHEET B5 FOR DETAIL.

NOTES:

1. SEE SUMMARY TABLE SHEETS B11 – B17 FOR STATION AND OFFSET OF DEMOLITION ITEMS.
2. SEE ROADWAY IMPROVEMENTS (R) SHEETS FOR DRIVEWAY RECONSTRUCTION LIMITS.
3. SEE SIGNAL & ELECTRICAL SHEETS FOR ADDITIONAL DEMO ITEMS.

**RECORD DRAWING**

1. DATA PROVIDED BY: _____ TITLE: _____
   THIS WILL SERVE TO CERTIFY THAT THESE RECORD DRAWINGS ARE A TRUE AND ACCURATE REPRESENTATION OF THE PROJECT AS CONSTRUCTED.
   CONTRACTOR: _____
   BY: _____ TITLE: _____ DATE: _____
2. DATA TRANSFERRED BY: _____ TITLE: _____
   COMPANY: _____ DATE: _____
3. BASED ON PERIODIC FIELD OBSERVATIONS BY THE ENGINEER (OR AN INDIVIDUAL UNDER HIS/HER DIRECT SUPERVISION), THE CONTRACTOR-PROVIDED DATA APPEARS TO REPRESENT THE PROJECT AS CONSTRUCTED.
   DATA TRANSFER CHECKED BY: _____ TITLE: _____
   COMPANY: _____ DATE: _____
   BY: _____

| DATA | DRAWN BY | CHECKED BY |
|---|---|---|
| BASE | TS | MJ |
| TOPOGRAPHY | BW | BW |
| PROFILE | AA | JK |
| STORM SEWER | MV | JH |
| WATER/SANITARY SEWER | CB | JK |
| GAS | CB | JK |
| TELEPHONE | CB | JK |
| ELECTRIC | JH | TK |
| DESIGN | AA | JK |
| QUANTITIES | AA | JK |
| PRELIMINARY/FINAL | AA | JK |
| MUNICIPAL/STATE | AA | JK |

PLAN CHECK

GRAPHIC 60 30 0 30 60 SCALE

| FIELD BOOKS | BM NO. | LOCATION | ELEV. |
|---|---|---|---|
| DESIGN CRW BOOK No. 149, 169, | CB 7D | See MOA Benchmark Book, Page D-56 | 94.77 |
| 195 & 196 | CB 7C | See MOA Benchmark Book, Page D-17 | 106.10 |
| STAKING | GAAB 86 | See MOA Benchmark Book, Page D-18 | 104.53 |
| | | | |
| | | | |
| ASBUILT | | | |
| CONTRACTOR | BASIS OF THIS DATUM GAAB 1972 ADJUST | | |
| INSPECTOR | | | |

CONSTRUCTION RECORD — VERTICAL DATUM

| REV | DATE | DESCRIPTION | BY |
|---|---|---|---|
| | | | |
| | | | |
| | | | |
| | | | |
| | | | |
| | | | |
| | | | |
| | | | |

REVISIONS

CRW ENGINEERING GROUP, LLC
3940 ARCTIC BLVD. SUITE 300
ANCHORAGE, ALASKA 99503
PHONE: (907) 562-3252
#AECL882-AK

CONSULTANT

STATE OF ALASKA 49TH
Justin T. Keene
CE-11775
REGISTERED PROFESSIONAL ENGINEER

SEAL

MUNICIPALITY OF ANCHORAGE

PROJECT MANAGEMENT AND ENGINEERING DEPARTMENT

16-29 W. 32ND AVENUE & E. 33RD AVENUE UPGRADES ALL
ARCTIC BOULEVARD TO OLD SEWARD HIGHWAY

DEMOLTION PLAN

STA 140+00 TO STA 147+50

SCALE HOR. 1"=30' VER. N/A | GRID SW1629, SW1630, SW1631 | DATE JAN 2020 | STATUS 65% | SHEET B7 of B17

File: J:\JobsData\10138.00 W 32nd And E 33rd Avenue Upgrade\00 CADD\01 Working Set\01 Civil\01 Design\10138.00 Demolition Plan.dwg

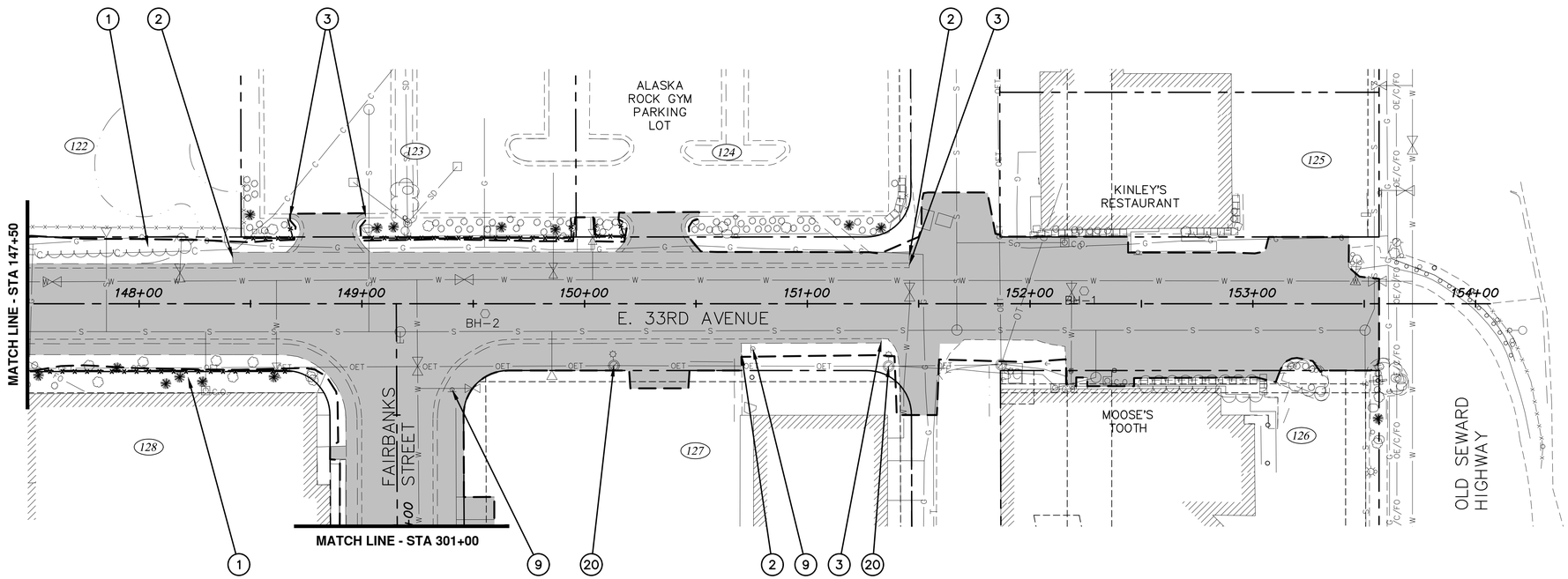


LEGEND

1. CLEAR AND GRUB WITHIN LIMITS OF DISTURBANCE AFTER CLEARING LIMITS HAVE BEEN APPROVED AND AFTER TEMPORARY TREE PROTECTION FENCES (SECTION 75.12) HAVE BEEN ESTABLISHED AS SHOWN, OR AS DIRECTED BY THE ENGINEER IN THE FIELD (SECTION 20.04). NOT ALL TREES, SHRUBS, AND VEGETATION ARE SPECIFICALLY CALLED OUT OR SHOWN.
2. REMOVE SIDEWALK OR CONCRETE APRON (SECTION 20.07).
3. REMOVE CURB AND GUTTER (SECTION 20.08).
4. REMOVE MANHOLE OR CATCH BASIN (SECTION 55.11).
5. DECOMMISSION FIRE HYDRANT ASSEMBLY (SECTION 60.08)
6. REMOVE PIPE (SECTION 70.07).
7. REMOVE AND RESET FENCE (SECTION 70.08).
8. REMOVE FENCE (SECTION 70.08).
9. REMOVE AND SALVAGE SIGN. THIS WORK SHALL BE INCIDENTAL TO THE BID ITEM STANDARD SIGNS (SECTION 70.11).
10. REMOVE AND RELOCATE SIGNS (SECTION 70.11).
11. REMOVE BOLLARD (SECTION 70.13).
12. REMOVE AND RESET BOLLARD GATE (SECTION 70.13).
13. REMOVAL/DISPOSAL AND/OR SALVAGE OF OBSTRUCTIONS (SECTION 70.22).
14. REMOVE JUNCTION BOX (SECTION 80.08).
15. REMOVE LUMINAIRE POLE (SECTION 80.28).
16. REMOVE LOAD CENTER (SECTION 80.28).
17. REMOVE SIGNAL MAST ARM OR COMBINATION POLE (SECTION 80.28).
18. REMOVE SIGNAL PEDESTAL OR PEDESTRIAN PUSHBUTTON POLE (SECTION 80.28).
19. REMOVE TRAFFIC CONTROLLER CABINET (SECTION 80.28).
20. REMOVE UTILITY POLE OR LUMINAIRE ARM (BY OTHERS).
21. PROTECT IN PLACE

REMOVAL OF PAVEMENT (SECTION 20.09) AND/OR, SIDEWALK, CURB & GUTTER, AND CONCRETE, AS SHOWN & NOTED IN SUMMARY TABLES.

APPROXIMATE LIMITS OF DISTURBANCE

REMOVE PIPE

TEMPORARY TREE PROTECTION FENCE (SECTION 75.12), LOCATIONS TO BE FIELD VERIFIED, SEE SHEET B5 FOR DETAIL.

NOTES:

1. SEE SUMMARY TABLE SHEETS B11 – B17 FOR STATION AND OFFSET OF DEMOLITION ITEMS.
2. SEE ROADWAY IMPROVEMENTS (R) SHEETS FOR DRIVEWAY RECONSTRUCTION LIMITS.
3. SEE SIGNAL & ELECTRICAL SHEETS FOR ADDITIONAL DEMO ITEMS.

**RECORD DRAWING**

1. DATA PROVIDED BY: _____ TITLE: _____
   THIS WILL SERVE TO CERTIFY THAT THESE RECORD DRAWINGS ARE A TRUE AND ACCURATE REPRESENTATION OF THE PROJECT AS CONSTRUCTED.
   CONTRACTOR: _____
   BY: _____ TITLE: _____ DATE: _____
2. DATA TRANSFERRED BY: _____ TITLE: _____
   COMPANY: _____ DATE: _____
3. BASED ON PERIODIC FIELD OBSERVATIONS BY THE ENGINEER (OR AN INDIVIDUAL UNDER HIS/HER DIRECT SUPERVISION), THE CONTRACTOR–PROVIDED DATA APPEARS TO REPRESENT THE PROJECT AS CONSTRUCTED.
   DATA TRANSFER CHECKED BY: _____ TITLE: _____
   COMPANY: _____ DATE: _____
   BY: _____

| DATA | DRAWN BY | CHECKED BY |
|---|---|---|
| BASE | TS | MJ |
| TOPOGRAPHY | BW | BW |
| PROFILE | AA | JK |
| STORM SEWER | MV | JH |
| WATER/SANITARY SEWER | CB | JK |
| GAS | CB | JK |
| TELEPHONE | CB | JK |
| ELECTRIC | JH | TK |
| DESIGN | AA | JK |
| QUANTITIES | AA | JK |
| PRELIMINARY/FINAL | AA | JK |
| MUNICIPAL/STATE | AA | JK |

PLAN CHECK

GRAPHIC SCALE 60 30 0 30 60

| FIELD BOOKS | BM NO. | LOCATION | ELEV. |
|---|---|---|---|
| DESIGN CRW BOOK No. 149, 169, | CB 7D | See MOA Benchmark Book, Page D–56 | 94.77 |
| 195 & 196 | CB 7C | See MOA Benchmark Book, Page D–17 | 106.10 |
| STAKING | GAAB 86 | See MOA Benchmark Book, Page D–18 | 104.53 |
| | | | |
| | | | |
| ASBUILT | | | |
| CONTRACTOR | BASIS OF THIS DATUM GAAB 1972 ADJUST | | |
| INSPECTOR | | | |

CONSTRUCTION RECORD

VERTICAL DATUM

| REV | DATE | DESCRIPTION | BY |
|---|---|---|---|
| | | | |
| | | | |
| | | | |
| | | | |
| | | | |
| | | | |
| | | | |
| | | | |

REVISIONS

CRW ENGINEERING GROUP, LLC
3940 ARCTIC BLVD. SUITE 300
ANCHORAGE, ALASKA 99503
PHONE: (907) 562–3252
#AECL882–AK

CONSULTANT

STATE OF ALASKA 49TH
Justin T. Keene
CE-11775
REGISTERED PROFESSIONAL ENGINEER

SEAL

MUNICIPALITY OF ANCHORAGE

PROJECT MANAGEMENT AND ENGINEERING DEPARTMENT

16–29 W. 32ND AVENUE & E. 33RD AVENUE UPGRADES ALL
ARCTIC BOULEVARD TO OLD SEWARD HIGHWAY

# DEMOLTION PLAN

STA 147+50 TO STA OLD SEWARD HWY

SCALE HOR. 1"=30' VER. N/A | GRID SW1629, SW1630, SW1631 | DATE JAN 2020 | STATUS 65% | SHEET B8 of B17

File: J:\JobsData\10138.00 W 32nd And E 33rd Avenue Upgrade\00 CADD\01 Working Set\01 Civil\01 Design\10138.00 Demolition Plan.dwg

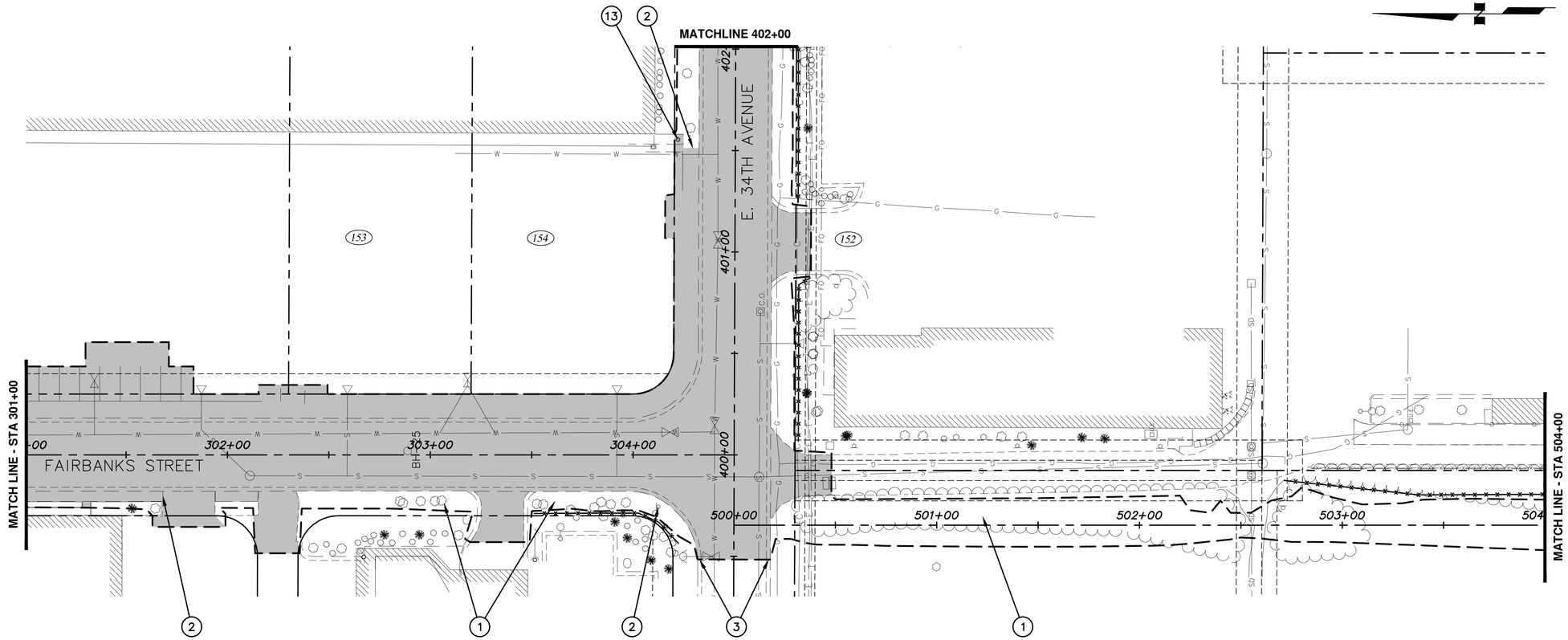


LEGEND

1. CLEAR AND GRUB WITHIN LIMITS OF DISTURBANCE AFTER CLEARING LIMITS HAVE BEEN APPROVED AND AFTER TEMPORARY TREE PROTECTION FENCES (SECTION 75.12) HAVE BEEN ESTABLISHED AS SHOWN, OR AS DIRECTED BY THE ENGINEER IN THE FIELD (SECTION 20.04). NOT ALL TREES, SHRUBS, AND VEGETATION ARE SPECIFICALLY CALLED OUT OR SHOWN.
2. REMOVE SIDEWALK OR CONCRETE APRON (SECTION 20.07).
3. REMOVE CURB AND GUTTER (SECTION 20.08).
4. REMOVE MANHOLE OR CATCH BASIN (SECTION 55.11).
5. DECOMMISSION FIRE HYDRANT ASSEMBLY (SECTION 60.08)
6. REMOVE PIPE (SECTION 70.07).
7. REMOVE AND RESET FENCE (SECTION 70.08).
8. REMOVE FENCE (SECTION 70.08).
9. REMOVE AND SALVAGE SIGN. THIS WORK SHALL BE INCIDENTAL TO THE BID ITEM STANDARD SIGNS (SECTION 70.11).
10. REMOVE AND RELOCATE SIGNS (SECTION 70.11).
11. REMOVE BOLLARD (SECTION 70.13).
12. REMOVE AND RESET BOLLARD GATE (SECTION 70.13).
13. REMOVAL/DISPOSAL AND/OR SALVAGE OF OBSTRUCTIONS (SECTION 70.22).
14. REMOVE JUNCTION BOX (SECTION 80.08).
15. REMOVE LUMINAIRE POLE (SECTION 80.28).
16. REMOVE LOAD CENTER (SECTION 80.28).
17. REMOVE SIGNAL MAST ARM OR COMBINATION POLE (SECTION 80.28).
18. REMOVE SIGNAL PEDESTAL OR PEDESTRIAN PUSHBUTTON POLE (SECTION 80.28).
19. REMOVE TRAFFIC CONTROLLER CABINET (SECTION 80.28).
20. REMOVE UTILITY POLE OR LUMINAIRE ARM (BY OTHERS).
21. PROTECT IN PLACE

REMOVAL OF PAVEMENT (SECTION 20.09) AND/OR, SIDEWALK, CURB & GUTTER, AND CONCRETE, AS SHOWN & NOTED IN SUMMARY TABLES.

APPROXIMATE LIMITS OF DISTURBANCE

REMOVE PIPE

TEMPORARY TREE PROTECTION FENCE (SECTION 75.12), LOCATIONS TO BE FIELD VERIFIED, SEE SHEET B5 FOR DETAIL.

NOTES:

1. SEE SUMMARY TABLE SHEETS B11 – B17 FOR STATION AND OFFSET OF DEMOLITION ITEMS.
2. SEE ROADWAY IMPROVEMENTS (R) SHEETS FOR DRIVEWAY RECONSTRUCTION LIMITS.
3. SEE SIGNAL & ELECTRICAL SHEETS FOR ADDITIONAL DEMO ITEMS.

**RECORD DRAWING**

1. DATA PROVIDED BY: _____ TITLE: _____
   THIS WILL SERVE TO CERTIFY THAT THESE RECORD DRAWINGS ARE A TRUE AND ACCURATE REPRESENTATION OF THE PROJECT AS CONSTRUCTED.
   CONTRACTOR: _____
   BY: _____ TITLE: _____ DATE: _____
2. DATA TRANSFERRED BY: _____ TITLE: _____
   COMPANY: _____ DATE: _____
3. BASED ON PERIODIC FIELD OBSERVATIONS BY THE ENGINEER (OR AN INDIVIDUAL UNDER HIS/HER DIRECT SUPERVISION), THE CONTRACTOR-PROVIDED DATA APPEARS TO REPRESENT THE PROJECT AS CONSTRUCTED.
   DATA TRANSFER CHECKED BY: _____ TITLE: _____
   COMPANY: _____ DATE: _____
   BY: _____

| DATA | DRAWN BY | CHECKED BY |
|---|---|---|
| BASE | TS | MJ |
| TOPOGRAPHY | BW | BW |
| PROFILE | AA | JK |
| STORM SEWER | MV | JH |
| WATER/SANITARY SEWER | CB | JK |
| GAS | CB | JK |
| TELEPHONE | CB | JK |
| ELECTRIC | JH | TK |
| DESIGN | AA | JK |
| QUANTITIES | AA | JK |
| PRELIMINARY/FINAL | AA | JK |
| MUNICIPAL/STATE | AA | JK |

PLAN CHECK

GRAPHIC 60 30 0 30 60 SCALE

| FIELD BOOKS | BM NO. | LOCATION | ELEV. |
|---|---|---|---|
| DESIGN CRW BOOK No. 149, 169, | CB 7D | See MOA Benchmark Book, Page D-56 | 94.77 |
| 195 & 196 | CB 7C | See MOA Benchmark Book, Page D-17 | 106.10 |
| STAKING | GAAB 86 | See MOA Benchmark Book, Page D-18 | 104.53 |
| | | | |
| | | | |
| ASBUILT | | | |
| CONTRACTOR | BASIS OF THIS DATUM GAAB 1972 ADJUST | | |
| INSPECTOR | | | |

CONSTRUCTION RECORD

VERTICAL DATUM

| REV | DATE | DESCRIPTION | BY |
|---|---|---|---|
| | | | |
| | | | |
| | | | |
| | | | |
| | | | |
| | | | |
| | | | |
| | | | |

REVISIONS

CRW ENGINEERING GROUP, LLC
3940 ARCTIC BLVD. SUITE 300
ANCHORAGE, ALASKA 99503
PHONE: (907) 562-3252
#AECL882-AK

CONSULTANT

STATE OF ALASKA 49TH
Justin T. Keene
CE-11775
REGISTERED PROFESSIONAL ENGINEER

SEAL

MUNICIPALITY OF ANCHORAGE

PROJECT MANAGEMENT AND ENGINEERING DEPARTMENT

16-29 W. 32ND AVENUE & E. 33RD AVENUE UPGRADES ALL
ARCTIC BOULEVARD TO OLD SEWARD HIGHWAY

DEMOLTION PLAN

STA 301+00 TO STA 504+00

SCALE HOR. 1"=30' VER. N/A | GRID SW1629, SW1630, SW1631 | DATE JAN 2020 | STATUS 65% | SHEET B9 of B17

File: J:\JobsData\10138.00 W 32nd And E 33rd Avenue Upgrade\00 CADD\01 Working Set\01 Civil\01 Design\10138.00 Demolition Plan.dwg

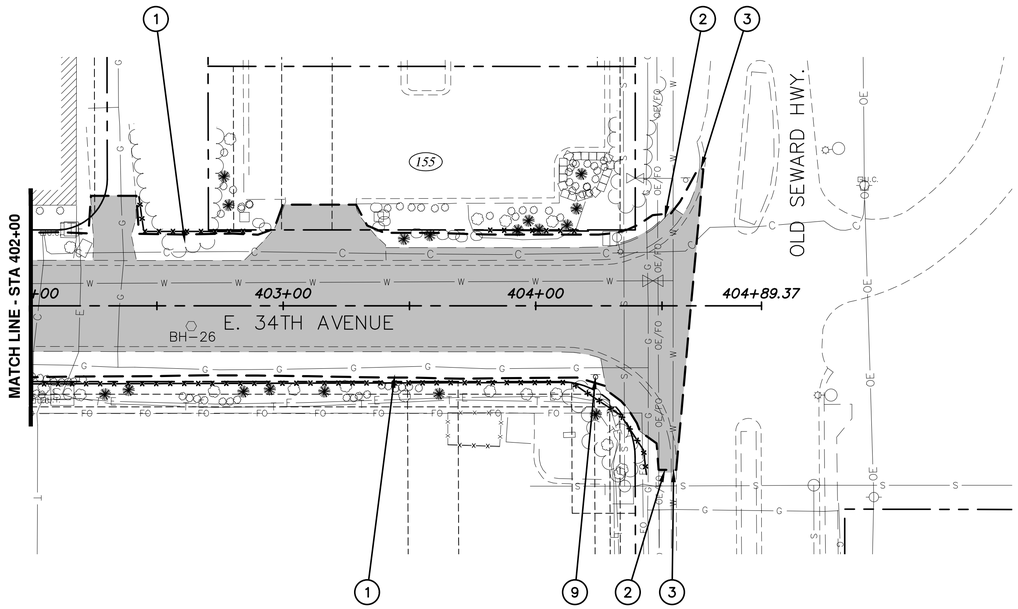


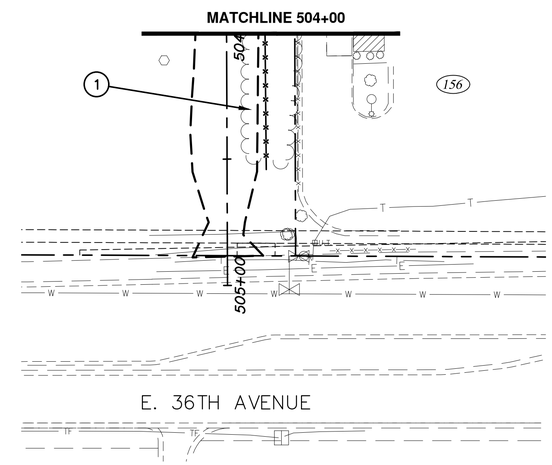


LEGEND

1. CLEAR AND GRUB WITHIN LIMITS OF DISTURBANCE AFTER CLEARING LIMITS HAVE BEEN APPROVED AND AFTER TEMPORARY TREE PROTECTION FENCES (SECTION 75.12) HAVE BEEN ESTABLISHED AS SHOWN, OR AS DIRECTED BY THE ENGINEER IN THE FIELD (SECTION 20.04). NOT ALL TREES, SHRUBS, AND VEGETATION ARE SPECIFICALLY CALLED OUT OR SHOWN.
2. REMOVE SIDEWALK OR CONCRETE APRON (SECTION 20.07).
3. REMOVE CURB AND GUTTER (SECTION 20.08).
4. REMOVE MANHOLE OR CATCH BASIN (SECTION 55.11).
5. DECOMMISSION FIRE HYDRANT ASSEMBLY (SECTION 60.08)
6. REMOVE PIPE (SECTION 70.07).
7. REMOVE AND RESET FENCE (SECTION 70.08).
8. REMOVE FENCE (SECTION 70.08).
9. REMOVE AND SALVAGE SIGN. THIS WORK SHALL BE INCIDENTAL TO THE BID ITEM STANDARD SIGNS (SECTION 70.11).
10. REMOVE AND RELOCATE SIGNS (SECTION 70.11).
11. REMOVE BOLLARD (SECTION 70.13).
12. REMOVE AND RESET BOLLARD GATE (SECTION 70.13).
13. REMOVAL/DISPOSAL AND/OR SALVAGE OF OBSTRUCTIONS (SECTION 70.22).
14. REMOVE JUNCTION BOX (SECTION 80.08).
15. REMOVE LUMINAIRE POLE (SECTION 80.28).
16. REMOVE LOAD CENTER (SECTION 80.28).
17. REMOVE SIGNAL MAST ARM OR COMBINATION POLE (SECTION 80.28).
18. REMOVE SIGNAL PEDESTAL OR PEDESTRIAN PUSHBUTTON POLE (SECTION 80.28).
19. REMOVE TRAFFIC CONTROLLER CABINET (SECTION 80.28).
20. REMOVE UTILITY POLE OR LUMINAIRE ARM (BY OTHERS).
21. PROTECT IN PLACE

REMOVAL OF PAVEMENT (SECTION 20.09) AND/OR, SIDEWALK, CURB & GUTTER, AND CONCRETE, AS SHOWN & NOTED IN SUMMARY TABLES.

APPROXIMATE LIMITS OF DISTURBANCE

REMOVE PIPE

TEMPORARY TREE PROTECTION FENCE (SECTION 75.12), LOCATIONS TO BE FIELD VERIFIED, SEE SHEET B5 FOR DETAIL.

NOTES:

1. SEE SUMMARY TABLE SHEETS B11 – B17 FOR STATION AND OFFSET OF DEMOLITION ITEMS.
2. SEE ROADWAY IMPROVEMENTS (R) SHEETS FOR DRIVEWAY RECONSTRUCTION LIMITS.
3. SEE SIGNAL & ELECTRICAL SHEETS FOR ADDITIONAL DEMO ITEMS.

**RECORD DRAWING**

1. DATA PROVIDED BY: _____ TITLE: _____
   THIS WILL SERVE TO CERTIFY THAT THESE RECORD DRAWINGS ARE A TRUE AND ACCURATE REPRESENTATION OF THE PROJECT AS CONSTRUCTED.
   CONTRACTOR: _____
   BY: _____ TITLE: _____ DATE: _____
2. DATA TRANSFERRED BY: _____ TITLE: _____
   COMPANY: _____ DATE: _____
3. BASED ON PERIODIC FIELD OBSERVATIONS BY THE ENGINEER (OR AN INDIVIDUAL UNDER HIS/HER DIRECT SUPERVISION), THE CONTRACTOR-PROVIDED DATA APPEARS TO REPRESENT THE PROJECT AS CONSTRUCTED.
   DATA TRANSFER CHECKED BY: _____ TITLE: _____
   COMPANY: _____ DATE: _____
   BY: _____

| DATA | DRAWN BY | CHECKED BY |
|---|---|---|
| BASE | TS | MJ |
| TOPOGRAPHY | BW | BW |
| PROFILE | AA | JK |
| STORM SEWER | MV | JH |
| WATER/SANITARY SEWER | CB | JK |
| GAS | CB | JK |
| TELEPHONE | CB | JK |
| ELECTRIC | JH | TK |
| DESIGN | AA | JK |
| QUANTITIES | AA | JK |
| PRELIMINARY/FINAL | AA | JK |
| MUNICIPAL/STATE | AA | JK |

PLAN CHECK

GRAPHIC 60 30 0 30 60 SCALE

| FIELD BOOKS | BM NO. | LOCATION | ELEV. |
|---|---|---|---|
| DESIGN CRW BOOK No. 149, 169, | CB 7D | See MOA Benchmark Book, Page D-56 | 94.77 |
| 195 & 196 | CB 7C | See MOA Benchmark Book, Page D-17 | 106.10 |
| STAKING | GAAB 86 | See MOA Benchmark Book, Page D-18 | 104.53 |
| | | | |
| | | | |
| ASBUILT | | | |
| CONTRACTOR | BASIS OF THIS DATUM GAAB 1972 ADJUST | | |
| INSPECTOR | | | |

CONSTRUCTION RECORD — VERTICAL DATUM

| REV | DATE | DESCRIPTION | BY |
|---|---|---|---|
| | | | |
| | | | |
| | | | |
| | | | |
| | | | |
| | | | |
| | | | |
| | | | |

REVISIONS

CRW ENGINEERING GROUP, LLC
3940 ARCTIC BLVD. SUITE 300
ANCHORAGE, ALASKA 99503
PHONE: (907) 562-3252
#AECL882-AK

CONSULTANT

STATE OF ALASKA 49TH Justin T. Keene CE-11775 REGISTERED PROFESSIONAL ENGINEER

SEAL

MUNICIPALITY OF ANCHORAGE

PROJECT MANAGEMENT AND ENGINEERING DEPARTMENT

16-29 W. 32ND AVENUE & E. 33RD AVENUE UPGRADES ALL
ARCTIC BOULEVARD TO OLD SEWARD HIGHWAY

DEMOLTION PLAN

STA 504+00 TO EOP

SCALE HOR. 1"=60' VER. N/A | GRID SW1629, SW1630, SW1631 | DATE JAN 2020 | STATUS 65% | SHEET B10 of B17

File: J:\JobsData\10138.00 W 32nd And E 33rd Avenue Upgrade\00 CADD\01 Working Set\01 Civil\01 Design\10138.00 Demolition Plan.dwg

20.07

## REMOVE SIDEWALK OR CONCRETE APRON ②

| SHEET | APPX STATION BEGIN | APPX OFFSET (FT) | APPX STATION END | APPX OFFSET (FT) | AREA (SY) | REMARKS |
|---|---|---|---|---|---|---|
| B1 | 99+92.7 | 43.5 RT | 100+06.7 | 43.5 RT | 4 | |
| B1 | 99+95.2 | 38.9 RT | 100+04.7 | 39.1 RT | 13 | |
| B1 | 100+29.4 | 43.5 LT | 103+18.9 | 22.3 LT | 140 | |
| B1 | 100+29.5 | 43.5 RT | 103+18.0 | 53.1 RT | 152 | |
| B1 | 105+26.8 | 25.7 LT | 105+29.2 | 25.6 LT | 2 | |
| B1 | 103+61.0 | 22.4 LT | 106+00.0 | 22.0 LT | 105 | |
| B1 | 103+61.7 | 53.3 RT | 106+00.0 | 21.8 RT | 118 | |
| | | | | | | |
| B2 | 106+00.0 | 21.8 RT | 112+73.9 | 51.6 RT | 312 | |
| B2 | 106+00.0 | 22.0 LT | 106+44.4 | 22.0 LT | 18 | |
| B2 | 106+85.3 | 22.0 LT | 109+59.3 | 54.3 LT | 125 | |
| B2 | 110+02.0 | 54.4 LT | 112+73.3 | 42.0 LT | 142 | |
| B2 | 110+10.8 | 38.8 LT | 110+30.5 | 38.5 LT | 36 | |
| B2 | 113+17.9 | 51.6 RT | 113+50.0 | 21.6 RT | 28 | |
| B2 | 113+17.8 | 51.1 LT | 113+50.0 | 22.3 LT | 25 | |
| | | | | | | |
| B3 | 113+50.0 | 22.3 LT | 115+55.0 | 55.8 LT | 105 | |
| B3 | 113+50.0 | 21.6 RT | 119+75.5 | 42.3 RT | 296 | |
| B3 | 113+87.4 | 28.0 LT | 113+90.4 | 28.0 LT | 2 | |
| B3 | 116+99.5 | 55.7 LT | 119+76.0 | 41.9 LT | 197 | |
| B3 | 118+36.3 | 50.5 LT | 118+41.0 | 50.5 LT | 15 | |
| B3 | 119+09.8 | 29.6 LT | 119+15.8 | 34.5 LT | 6 | |
| B3 | 120+28.8 | 43.0 LT | 120+58.5 | 23.2 RT | 25 | |
| B3 | 120+28.9 | 42.0 LT | 120+63.4 | 22.9 LT | 31 | |
| B3 | 120+94.5 | 22.9 RT | 121+00.0 | 22.7 RT | 1 | |
| B3 | 120+94.9 | 22.3 LT | 121+00.0 | 22.3 LT | 1 | |
| | | | | | | |
| B4 | 121+00.0 | 22.3 LT | 122+87.5 | 22.5 LT | 83 | |
| B4 | 121+00.0 | 22.7 RT | 122+51.7 | 22.5 RT | 66 | |
| B4 | 122+86.2 | 22.6 RT | 125+13.7 | 22.7 RT | 102 | |
| B4 | 123+09.8 | 22.5 LT | 124+57.6 | 22.6 LT | 66 | |
| B4 | 124+76.9 | 22.6 LT | 125+84.6 | 38.6 LT | 63 | |
| B4 | 125+47.4 | 22.2 RT | 125+89.8 | 34.8 RT | 26 | |
| B4 | 125+67.0 | 61.0 LT | 129+00.0 | 17.1 LT | 203 | |
| B4 | 126+71.2 | 59.3 RT | 129+00.0 | 29.2 RT | 178 | |
| B4 | 128+38.7 | 89.0 RT | 129+00.0 | 77.5 RT | 27 | |
| | | | | | | |
| B5 | 129+00.0 | 72.6 RT | 129+38.0 | 94.8 RT | 25 | |
| B5 | 129+00.0 | 17.1 LT | 129+48.0 | 15.2 LT | 28 | |
| B5 | 129+00.0 | 29.2 RT | 131+44.2 | 29.8 RT | 124 | |
| B5 | 129+99.7 | 74.0 LT | 132+50.0 | 15.5 LT | 168 | |
| B5 | 131+82.8 | 52.7 RT | 132+50.0 | 24.5 RT | 57 | |

20.07

## REMOVE SIDEALK OR CONCRETE APRON ②

| SHEET | APPX STATION BEGIN | APPX OFFSET (FT) | APPX STATION END | APPX OFFSET (FT) | AREA (SY) | REMARKS |
|---|---|---|---|---|---|---|
| B6 | 132+50.0 | 15.5 LT | 133+40.8 | 30.8 LT | 49 | |
| B6 | 132+50.0 | 24.5 RT | 134+33.8 | 21.2 RT | 109 | |
| B6 | 133+81.9 | 31.7 LT | 135+50.7 | 26.2 LT | 101 | |
| B6 | 134+65.7 | 21.2 RT | 137+79.8 | 28.5 RT | 173 | |
| B6 | 136+15.9 | 26.0 LT | 136+44.2 | 20.3 LT | 15 | |
| B6 | 136+69.5 | 25.6 LT | 138+66.6 | 59.1 LT | 121 | |
| B6 | 138+11.1 | 28.7 RT | 138+66.5 | 62.6 RT | 47 | |
| B6 | 137+42.8 | 4.0 LT | 138+26.2 | 4.1 LT | 28 | |
| B6 | 138+29.2 | 4.5 LT | 138+49.4 | 3.9 LT | 15 | |
| B6 | 139+35.6 | 59.0 LT | 140+00.0 | 28.9 RT | 51 | |
| B6 | 139+35.7 | 57.7 RT | 140+00.0 | 24.9 RT | 55 | |
| B6 | 139+56.5 | 0.9 RT | 139+63.3 | 0.9 RT | 1 | |
| | | | | | | |
| B7 | 140+00.0 | 24.9 RT | 141+31.2 | 23.4 RT | 75 | |
| B7 | 140+00.0 | 28.9 RT | 141+36.9 | 22.9 LT | 76 | |
| B7 | 140+51.0 | 22.1 RT | 140+57.6 | 22.0 RT | 5 | |
| B7 | 143+94.0 | 51.6 RT | 146+36.0 | 23.0 RT | 145 | |
| B7 | 146+56.2 | 23.0 RT | 146+95.7 | 23.0 RT | 22 | |
| B7 | 147+15.7 | 22.9 RT | 147+50.0 | 22.9 RT | 19 | |
| | | | | | | |
| B8 | 147+50.0 | 22.9 RT | 148+93.0 | 100.0 RT | 117 | |
| B8 | 148+42.0 | 23.1 LT | 151+45.8 | 23.2 LT | 168 | |
| B8 | 148+89.3 | 64.0 RT | 148+89.4 | 69.8 RT | 4 | |
| | | | | | | |
| B9 | 148+91.5 | 128.6 RT | 148+91.5 | 132.5 RT | 1 | |
| B9 | 148+93.0 | 100.0 RT | 148+93.3 | 168.1 RT | 38 | |
| B9 | 149+93.3 | 194.1 RT | 148+93.4 | 215.0 RT | 12 | |
| B9 | 401+53.0 | 27.9 LT | 401+58.0 | 27.8 LT | 2 | |
| | | | | | | |
| B10 | 403+40.7 | 23.0 LT | 404+54.2 | 38.9 LT | 69 | |
| B10 | 404+27.9 | 33.3 RT | 404+48.7 | 65.9 RT | 47 | |

**RECORD DRAWING**

1. DATA PROVIDED BY: _____ TITLE: _____
   THIS WILL SERVE TO CERTIFY THAT THESE RECORD DRAWINGS ARE A TRUE AND ACCURATE REPRESENTATION OF THE PROJECT AS CONSTRUCTED.
   CONTRACTOR: _____
   BY: _____ TITLE: _____ DATE: _____
2. DATA TRANSFERRED BY: _____ TITLE: _____
   COMPANY: _____ DATE: _____
3. BASED ON PERIODIC FIELD OBSERVATIONS BY THE ENGINEER (OR AN INDIVIDUAL UNDER HIS/HER DIRECT SUPERVISION), THE CONTRACTOR-PROVIDED DATA APPEARS TO REPRESENT THE PROJECT AS CONSTRUCTED.
   DATA TRANSFER CHECKED BY: _____ TITLE: _____
   COMPANY: _____ DATE: _____
   BY: _____

| DATA | DRAWN BY | CHECKED BY |
|---|---|---|
| BASE | TS | MJ |
| TOPOGRAPHY | BW | BW |
| PROFILE | AA | JK |
| STORM SEWER | MV | JH |
| WATER/SANITARY SEWER | CB | JK |
| GAS | CB | JK |
| TELEPHONE | CB | JK |
| ELECTRIC | JH | TK |
| DESIGN | AA | JK |
| QUANTITIES | AA | JK |
| PRELIMINARY/FINAL | AA | JK |
| MUNICIPAL/STATE | AA | JK |

PLAN CHECK

| FIELD BOOKS | BM NO. | LOCATION | ELEV. |
|---|---|---|---|
| DESIGN CRW BOOK No. 149, 169, | CB 7D | See MOA Benchmark Book, Page D-56 | 94.77 |
| 195 & 196 | CB 7C | See MOA Benchmark Book, Page D-17 | 106.10 |
| STAKING | GAAB 86 | See MOA Benchmark Book, Page D-18 | 104.53 |
| ASBUILT | | | |
| CONTRACTOR | BASIS OF THIS DATUM GAAB 1972 ADJUST | | |
| INSPECTOR | | | |

CONSTRUCTION RECORD — VERTICAL DATUM

| REV | DATE | DESCRIPTION | BY |
|---|---|---|---|
| | | | |

REVISIONS

CRW ENGINEERING GROUP, LLC
3940 ARCTIC BLVD. SUITE 300
ANCHORAGE, ALASKA 99503
PHONE: (907) 562-3252
#AECL882-AK

CONSULTANT

STATE OF ALASKA 49 TH
Justin T. Keene
CE-11775
REGISTERED PROFESSIONAL ENGINEER

SEAL

MUNICIPALITY OF ANCHORAGE

PROJECT MANAGEMENT AND ENGINEERING DEPARTMENT

16-29 W. 32ND AVENUE & E. 33RD AVENUE UPGRADES ALL
ARCTIC BOULEVARD TO OLD SEWARD HIGHWAY

# DEMOLTION SUMMARY TABLES

SCALE HOR. N/A VER. N/A | GRID SW1629, SW1630, SW1631 | DATE JAN 2020 | STATUS 65% | SHEET B11 of B17

File: J:\JobsData\10138.00 W 32nd And E 33rd Avenue Upgrade\00 CADD\01 Working Set\01 Civil\01 Design\10138.00 Demolition Plan.dwg

## 20.08

### REMOVE CURB AND GUTTER ③

| SHEET | APPX STATION BEGIN | APPX OFFSET (FT) | APPX STATION END | APPX OFFSET (FT) | LENGTH (LF) | REMARKS |
|---|---|---|---|---|---|---|
| B1 | 99+96.4 | 33.1 RT | 100+04.8 | 34.0 RT | 59 | |
| B1 | 100+24.4 | 43.5 RT | 103+22.0 | 53.1 RT | 340 | |
| B1 | 100+24.5 | 43.5 LT | 103+27.1 | 38.5 LT | 328 | |
| B1 | 103+53.4 | 38.3 LT | 106+00.0 | 18.0 LT | 258 | |
| B1 | 103+57.8 | 53.3 RT | 106+00.0 | 17.8 RT | 270 | |
| | | | | | | |
| B2 | 106+00.0 | 18.1 LT | 106+51.6 | 38.5 LT | 64 | |
| B2 | 106+00.0 | 17.8 RT | 112+77.9 | 51.6 RT | 703 | |
| B2 | 106+77.5 | 38.5 LT | 109+63.4 | 54.3 LT | 325 | |
| B2 | 109+97.9 | 54.4 LT | 112+75.4 | 51.1 LT | 332 | |
| B2 | 113+14.0 | 51.6 RT | 113+50.0 | 17.6 RT | 61 | |
| B2 | 113+15.0 | 57.3 LT | 113+50.0 | 18.3 LT | 67 | |
| | | | | | | |
| B3 | 113+50.0 | 18.3 LT | 115+59.0 | 55.8 LT | 238 | |
| B3 | 113+50.0 | 17.6 RT | 119+79.2 | 42.9 RT | 647 | |
| B3 | 115+94.9 | 55.7 LT | 119+80.0 | 41.9 LT | 432 | |
| B3 | 117+12.3 | 29.2 LT | 117+12.5 | 39.5 LT | 10 | |
| B3 | 117+31.7 | 39.5 LT | 117+31.9 | 29.7 LT | 10 | |
| B3 | 117+59.1 | 45.4 LT | 117+67.1 | 27.6 LT | 24 | |
| B3 | 119+15.8 | 30.0 LT | 119+17.9 | 21.6 LT | 14 | |
| B3 | 119+45.2 | 21.8 LT | 119+46.0 | 29.8 LT | 12 | |
| B3 | 120+24.9 | 43.1 RT | 120+60.4 | 25.2 RT | 57 | |
| B3 | 120+24.9 | 42.0 LT | 120+47.3 | 50.0 LT | 97 | |
| B3 | 120+90.9 | 32.6 RT | 121+00.0 | 19.3 RT | 17 | |
| B3 | 121+00.0 | 47.5 LT | 121+00.0 | 19.3 LT | 37 | |
| | | | | | | |
| B4 | 121+00.0 | 19.3 LT | 122+83.8 | 38.6 LT | 207 | |
| B4 | 121+00.0 | 19.3 RT | 122+56.4 | 39.5 RT | 171 | |
| B4 | 122+82.1 | 40.0 RT | 125+15.5 | 26.6 RT | 253 | |
| B4 | 123+13.0 | 38.6 LT | 124+57.7 | 35.0 LT | 181 | |
| B4 | 124+77.0 | 35.0 LT | 125+91.1 | 61.2 LT | 161 | |
| B4 | 124+82.1 | 29.6 LT | 125+84.5 | 56.6 LT | 121 | |
| B4 | 125+42.9 | 31.4 RT | 125+91.0 | 59.4 RT | 87 | |
| B4 | 126+44.2 | 61.0 LT | 129+00.0 | 12.0 LT | 285 | |
| B4 | 126+54.1 | 59.3 RT | 129+00.0 | 24.1 RT | 259 | |
| B4 | 128+38.7 | 89.0 RT | 129+00.0 | 72.6 RT | 68 | |
| | | | | | | |
| B5 | 129+00.0 | 72.6 RT | 129+38.0 | 94.8 RT | 48 | |
| B5 | 129+00.0 | 12.0 LT | 129+50.2 | 77.4 LT | 120 | |
| B5 | 129+00.0 | 24.1 RT | 131+54.9 | 61.6 RT | 265 | |
| B5 | 129+71.3 | 94.9 LT | 132+50.0 | 10.6 LT | 332 | |
| B5 | 131+61.8 | 24.7 RT | 131+85.1 | 23.5 RT | 25 | |
| B5 | 131+79.2 | 53.8 RT | 132+50.0 | 19.6 RT | 106 | |
| | | | | | | |
| B6 | 132+50.0 | 19.6 RT | 137+67.2 | 50.8 RT | 695 | |
| B6 | 132+50.0 | 10.6 LT | 136+45.0 | 23.7 LT | 729 | |
| B6 | 136+71.9 | 43.7 LT | 138+71.5 | 59.2 LT | 242 | |
| B6 | 137+42.8 | 4.0 LT | 138+26.2 | 4.1 LT | 173 | |
| B6 | 138+16.5 | 51.2 RT | 138+71.6 | 62.7 RT | 113 | |
| B6 | 139+30.5 | 59.0 LT | 140+00.0 | 23.9 LT | 92 | |
| B6 | 139+30.7 | 57.7 RT | 140+00.0 | 19.3 RT | 95 | |
| B6 | 139+56.5 | 0.9 RT | 139+63.3 | 0.9 RT | 16 | |

## 20.08

### REMOVE CURB AND GUTTER ③

| SHEET | APPX STATION BEGIN | APPX OFFSET (FT) | APPX STATION END | APPX OFFSET (FT) | LENGTH (LF) | REMARKS |
|---|---|---|---|---|---|---|
| B7 | 140+00.0 | 19.3 RT | 143+52.9 | 63.3 RT | 456 | |
| B7 | 140+00.0 | 23.9 LT | 147+50.0 | 18.0 LT | 750 | |
| B7 | 143+89.0 | 64.2 RT | 147+50.0 | 17.9 RT | 393 | |
| | | | | | | |
| B8 | 147+50.0 | 18.0 LT | 151+45.8 | 18.3 LT | 396 | |
| B8 | 147+50.0 | 17.9 RT | 148+98.0 | 100.2 RT | 215 | |
| B8 | 148+66.2 | 23.3 LT | 148+67.8 | 38.4 LT | 19 | |
| B8 | 149+01.7 | 38.6 LT | 149+03.5 | 23.3 LT | 19 | |
| B8 | 149+33.9 | 100.1 RT | 151+33.1 | 17.6 RT | 267 | |
| B8 | 150+13.9 | 23.4 LT | 150+15.3 | 38.9 LT | 20 | |
| B8 | 150+51.4 | 39.3 LT | 150+52.2 | 23.5 LT | 22 | |
| | | | | | | |
| B9 | 301+00.0 | 17.9 RT | 399+48.4 | 17.8 LT | 351 | |
| B9 | 301+00.0 | 18.1 LT | 402+00.0 | 18.0 LT | 499 | |
| B9 | 399+48.5 | 18.0 RT | 402+00.0 | 18.1 RT | 252 | |
| | | | | | | |
| B10 | 402+00.0 | 18.0 LT | 404+64.7 | 53.9 LT | 284 | |
| B10 | 402+00.0 | 18.1 RT | 404+53.7 | 65.9 RT | 283 | |

## 20.09

### REMOVE PAVEMENT

| SHEET | STATION TO STATION | OFFSET | AREA (SY) | REMARKS |
|---|---|---|---|---|
| B1 | BOP TO 106+00 | LT & RT | 3,394 | W. 32ND AVENUE, SIDE STREETS AND DRIVEWAYS |
| | | | | |
| B2 | 106+00 TO 113+50 | LT & RT | 3,348 | W. 32ND AVENUE, SIDE STREETS AND DRIVEWAYS |
| | | | | |
| B3 | 113+50 TO 121+00 | LT & RT | 4,687 | W. 32ND AVENUE, SIDE STREETS AND DRIVEWAYS |
| | | | | |
| B4 | 121+00 TO 129+00 | LT & RT | 4,465 | W. 32ND AVENUE, SIDE STREETS AND DRIVEWAYS |
| | | | | |
| B5 | 129+00 TO 132+50 | LT & RT | 1,761 | W. 32ND AVENUE, SIDE STREETS AND DRIVEWAYS |
| | | | | |
| B6 | 132+50 TO 140+00 | LT & RT | 3,943 | W. 32ND AVENUE, SIDE STREETS AND DRIVEWAYS |
| | | | | |
| B7 | 140+00 TO 147+50 | LT & RT | 3,571 | W. 32ND AVENUE, SIDE STREETS AND DRIVEWAYS |
| | | | | |
| B8 | 147+50 TO EOP | LT & RT | 3,577 | W. 32ND AVENUE, SIDE STREETS AND DRIVEWAYS |
| | | | | |
| B9 | 301+00 TO 402+00 | LT & RT | 2,204 | FAIRBANKS STREET |
| | | | | |
| B10 | 402+00 TO EOP | LT & RT | 1,176 | E. 34TH AVENUE |

NOTES: 1. SEE ROADWAY IMPROVEMENT SHEETS FOR ROADWAY PAVEMENT REMOVAL LIMITS.

**RECORD DRAWING**

1. DATA PROVIDED BY: _____ TITLE: _____
   THIS WILL SERVE TO CERTIFY THAT THESE RECORD DRAWINGS ARE A TRUE AND ACCURATE REPRESENTATION OF THE PROJECT AS CONSTRUCTED.
   CONTRACTOR: _____
   BY: _____ TITLE: _____ DATE: _____
2. DATA TRANSFERRED BY: _____ TITLE: _____
   COMPANY: _____ DATE: _____
3. BASED ON PERIODIC FIELD OBSERVATIONS BY THE ENGINEER (OR AN INDIVIDUAL UNDER HIS/HER DIRECT SUPERVISION), THE CONTRACTOR-PROVIDED DATA APPEARS TO REPRESENT THE PROJECT AS CONSTRUCTED.
   DATA TRANSFER CHECKED BY: _____ TITLE: _____
   COMPANY: _____ DATE: _____
   BY: _____

| DATA | DRAWN BY | CHECKED BY |
|---|---|---|
| BASE | TS | MJ |
| TOPOGRAPHY | BW | BW |
| PROFILE | AA | JK |
| STORM SEWER | MV | JH |
| WATER/SANITARY SEWER | CB | JK |
| GAS | CB | JK |
| TELEPHONE | CB | JK |
| ELECTRIC | JH | TK |
| DESIGN | AA | JK |
| QUANTITIES | AA | JK |
| PRELIMINARY/FINAL | AA | JK |
| MUNICIPAL/STATE | AA | JK |

PLAN CHECK

| FIELD BOOKS | BM NO. | LOCATION | ELEV. |
|---|---|---|---|
| DESIGN CRW BOOK No. 149, 169, | CB 7D | See MOA Benchmark Book, Page D-56 | 94.77 |
| 195 & 196 | CB 7C | See MOA Benchmark Book, Page D-17 | 106.10 |
| STAKING | GAAB 86 | See MOA Benchmark Book, Page D-18 | 104.53 |
| ASBUILT | | | |
| CONTRACTOR | BASIS OF THIS DATUM GAAB 1972 ADJUST | | |
| INSPECTOR | | | |

CONSTRUCTION RECORD — VERTICAL DATUM

| REV | DATE | DESCRIPTION | BY |
|---|---|---|---|
| | | | |

REVISIONS

CRW ENGINEERING GROUP, LLC
3940 ARCTIC BLVD. SUITE 300
ANCHORAGE, ALASKA 99503
PHONE: (907) 562-3252
#AECL882-AK

CONSULTANT

STATE OF ALASKA 49TH — Justin T. Keene CE-11775 — REGISTERED PROFESSIONAL ENGINEER

SEAL

MUNICIPALITY OF ANCHORAGE

PROJECT MANAGEMENT AND ENGINEERING DEPARTMENT

16-29 W. 32ND AVENUE & E. 33RD AVENUE UPGRADES ALL
ARCTIC BOULEVARD TO OLD SEWARD HIGHWAY

DEMOLTION SUMMARY TABLES

SCALE HOR. N/A VER. N/A | GRID SW1629, SW1630, SW1631 | DATE JAN 2020 | STATUS 65% | SHEET B12 of B17

File: J:\JobsData\10138.00 W 32nd And E 33rd Avenue Upgrade\00 CADD\01 Working Set\01 Civil\01 Design\10138.00 Demolition Plan.dwg

## 55.11

### REMOVE MANHOLE OR CATCH BASIN ④

| SHEET | APPX STATION | APPX OFFSET (FT) | CATCH BASIN | MANHOLE | REMARKS |
|---|---|---|---|---|---|
| B1 | 100+46.3 | 18.0 RT | | X | |
| B1 | 100+49.4 | 18.4 LT | X | | |
| B1 | 101+34.5 | 3.0 LT | | X | |
| B1 | 103+16.6 | 22.2 RT | X | | |
| B1 | 103+22.0 | 23.8 LT | X | | |
| B1 | 103+40.4 | 2.7 LT | | X | |
| B1 | 103+57.6 | 24.3 LT | X | | |
| B1 | 103+62.8 | 22.5 RT | X | | |
| | | | | | |
| B2 | 106+46.7 | 23.1 LT | X | | |
| B2 | 106+66.4 | 2.2 LT | | X | |
| B2 | 106+82.8 | 23.1 LT | X | | |
| B2 | 109+56.9 | 22.9 LT | X | | |
| B2 | 109+80.1 | 17.4 RT | X | | |
| B2 | 109+82.2 | 1.7 LT | | X | |
| B2 | 110+03.4 | 22.9 LT | X | | |
| B2 | 113+18.5 | 24.1 LT | X | | |
| B2 | 113+23.7 | 19.8 RT | X | | |
| | | | | | |
| B3 | 115+53.4 | 23.2 LT | X | | |
| B3 | 115+76.6 | 17.2 RT | X | | |
| B3 | 116+00.4 | 23.4 LT | X | | |
| | | | | | |
| B4 | 125+66.6 | 17.9 RT | X | | |
| B4 | 125+66.6 | 18.0 LT | | X | |
| B4 | 125+74.1 | 29.5 LT | | X | |
| B4 | 126+88.9 | 23.5 LT | X | | |
| B4 | 128+14.6 | 3.0 RT | | X | |
| B4 | 128+97.9 | 8.0 RT | | X | |
| | | | | | |
| B5 | 129+91.4 | 13.5 RT | | X | |
| B5 | 130+22.5 | 8.2 LT | X | | |
| B5 | 130+22.5 | 26.8 RT | X | | |
| | | | | | |
| B6 | 139+08.4 | 55.7 LT | | X | |
| B6 | 139+29.8 | 54.2 LT | X | | |
| B6 | 139+30.1 | 50.9 RT | X | | |

## 60.08

### DECOMMISSION FIRE HYDRANT ASSEMBLY ⑤

| SHEET | STATION | OFFSET (FT) | REMARKS |
|---|---|---|---|
| B4 | 125+58.7 | 23.9 LT | |
| | | | |
| B5 | 132+43.3 | 20.0 LT | |
| | | | |
| B6 | 136+33.1 | 26.4 RT | |

## 70.07

### REMOVE PIPE ⑥

| SHEET | APPX BEGIN STATION | APPX BEGIN OFFSET (FT) | APPX END STATION | APPX END OFFSET (FT) | SIZE (INCH) | LENGTH (FT) | REMARKS |
|---|---|---|---|---|---|---|---|
| B1 | 99+99.89 | 32.5 RT | 100+46.3 | 18.0 RT | 12 | 48.6 | |
| B1 | 100+46.3 | 18.0 RT | 100+49.4 | 18.4 LT | 12 | 36.4 | |
| B1 | 100+46.3 | 18.0 RT | 101+34.5 | 3.0 LT | 15 | 90.7 | |
| B1 | 101+34.5 | 3.0 LT | 103+40.4 | 2.7 LT | 15 | 205.4 | |
| B1 | 103+40.4 | 2.7 LT | 103+16.6 | 22.2 RT | 12 | 34.4 | |
| B1 | 103+40.4 | 2.7 LT | 103+22.0 | 23.8 LT | 12 | 28.0 | |
| B1 | 103+40.4 | 2.7 LT | 103+57.6 | 24.3 LT | 12 | 27.6 | |
| B1 | 103+40.4 | 2.7 LT | 103+62.8 | 22.5 RT | 12 | 33.7 | |
| B1 | 103+40.4 | 2.7 LT | 106+66.4 | 2.2 LT | 15 | 326.0 | |
| | | | | | | | |
| B2 | 106+66.4 | 2.2 LT | 106+46.7 | 23.1 LT | 12 | 28.8 | |
| B2 | 106+66.4 | 2.2 LT | 106+82.8 | 23.1 LT | 12 | 26.5 | |
| B2 | 106+66.4 | 2.2 LT | 109+82.2 | 1.7 LT | 15 | 315.8 | |
| B2 | 109+82.2 | 1.7 LT | 109+56.9 | 22.9 LT | 12 | 33.1 | |
| B2 | 109+82.2 | 1.7 LT | 109+80.1 | 17.4 RT | 12 | 19.2 | |
| B2 | 109+82.2 | 1.7 LT | 109+81.9 | 38.5 LT | 12 | 36.9 | |
| B2 | 109+82.2 | 1.7 LT | 110+03.4 | 22.9 LT | 12 | 30.0 | |
| B2 | 113+13.2 | 2.0 LT | 113+18.5 | 24.1 LT | 12 | 22.7 | |
| B2 | 113+13.2 | 2.0 LT | 113+23.7 | 19.8 RT | 12 | 24.2 | |
| | | | | | | | |
| B3 | 115+53.4 | 23.2 LT | 115+80.2 | 2.1 LT | 12 | 34.2 | |
| B3 | 115+80.2 | 2.1 LT | 116+00.4 | 23.4 LT | 12 | 29.4 | |
| B3 | 115+80.2 | 2.1 LT | 115+76.9 | 17.2 RT | 10 | 19.6 | |
| B3 | 115+80.2 | 2.1 LT | 115+79.6 | 39.4 LT | 18 | 37.4 | |
| | | | | | | | |
| B4 | 125+66.6 | 18.0 LT | 125+66.6 | 17.9 RT | 12 | 36.0 | |
| B4 | 125+66.6 | 18.0 LT | 125+74.1 | 29.5 LT | 12 | 13.7 | |
| B4 | 125+74.1 | 29.5 LT | 125+91.5 | 42.2 LT | 12 | 21.6 | |
| B4 | 126+50.2 | 2.9 RT | 126+88.9 | 23.5 LT | 12 | 46.9 | |
| B4 | 126+50.2 | 2.9 RT | 128+14.6 | 3.0 RT | 18 | 164.5 | |
| B4 | 128+14.6 | 3.0 RT | 128+97.9 | 8.0 RT | 18 | 127.8 | |
| | | | | | | | |
| B5 | 128+97.9 | 8.0 RT | 129+91.4 | 13.5 RT | 18 | 86.4 | |
| B5 | 129+91.4 | 13.5 RT | 130+22.5 | 8.2 LT | 12 | 37.9 | |
| B5 | 129+91.4 | 13.5 RT | 130+22.5 | 26.8 RT | 12 | 33.8 | |
| B5 | 129+91.4 | 13.5 RT | 130+02.9 | 49.3 RT | 12 | 37.5 | |
| | | | | | | | |
| B6 | 139+08.0 | 40.6 RT | 139+30.1 | 50.9 RT | 12 | 24.4 | |
| B6 | 139+08.4 | 55.7 LT | 139+29.8 | 54.2 LT | 12 | 21.5 | |

**RECORD DRAWING**

1. DATA PROVIDED BY: _____ TITLE: _____
   THIS WILL SERVE TO CERTIFY THAT THESE RECORD DRAWINGS ARE A TRUE AND ACCURATE REPRESENTATION OF THE PROJECT AS CONSTRUCTED.
   CONTRACTOR: _____
   BY: _____ TITLE: _____ DATE: _____
2. DATA TRANSFERRED BY: _____ TITLE: _____
   COMPANY: _____ DATE: _____
3. BASED ON PERIODIC FIELD OBSERVATIONS BY THE ENGINEER (OR AN INDIVIDUAL UNDER HIS/HER DIRECT SUPERVISION), THE CONTRACTOR-PROVIDED DATA APPEARS TO REPRESENT THE PROJECT AS CONSTRUCTED.
   DATA TRANSFER CHECKED BY: _____ TITLE: _____
   COMPANY: _____ DATE: _____
   BY: _____

| DATA | DRAWN BY | CHECKED BY |
|---|---|---|
| BASE | TS | MJ |
| TOPOGRAPHY | BW | BW |
| PROFILE | AA | JK |
| STORM SEWER | MV | JH |
| WATER/SANITARY SEWER | CB | JK |
| GAS | CB | JK |
| TELEPHONE | CB | JK |
| ELECTRIC | JH | TK |
| DESIGN | AA | JK |
| QUANTITIES | AA | JK |
| PRELIMINARY/FINAL | AA | JK |
| MUNICIPAL/STATE | AA | JK |

PLAN CHECK

| FIELD BOOKS | BM NO. | LOCATION | ELEV. |
|---|---|---|---|
| DESIGN CRW BOOK No. 149, 169, | CB 7D | See MOA Benchmark Book, Page D-56 | 94.77 |
| 195 & 196 | CB 7C | See MOA Benchmark Book, Page D-17 | 106.10 |
| STAKING | GAAB 86 | See MOA Benchmark Book, Page D-18 | 104.53 |
| | | | |
| | | | |
| ASBUILT | | | |
| CONTRACTOR | BASIS OF THIS DATUM GAAB 1972 ADJUST | | |
| INSPECTOR | | | |

CONSTRUCTION RECORD — VERTICAL DATUM

| REV | DATE | DESCRIPTION | BY |
|---|---|---|---|
| | | | |
| | | | |
| | | | |
| | | | |
| | | | |
| | | | |
| | | | |
| | | | |

REVISIONS

CRW ENGINEERING GROUP, LLC
3940 ARCTIC BLVD. SUITE 300
ANCHORAGE, ALASKA 99503
PHONE: (907) 562-3252
#ECL882-AK

CONSULTANT

STATE OF ALASKA 49TH — Justin T. Keene CE-11775 — REGISTERED PROFESSIONAL ENGINEER

SEAL

MUNICIPALITY OF ANCHORAGE

PROJECT MANAGEMENT AND ENGINEERING DEPARTMENT

16-29 W. 32ND AVENUE & E. 33RD AVENUE UPGRADES — ALL
ARCTIC BOULEVARD TO OLD SEWARD HIGHWAY

DEMOLTION SUMMARY TABLES

SCALE HOR. N/A VER. N/A | GRID SW1629, SW1630, SW1631 | DATE JAN 2020 | STATUS 65% | SHEET B13 of B17

File: J:\JobsData\10138.00 W 32nd And E 33rd Avenue Upgrade\00 CADD\01 Working Set\01 Civil\01 Design\10138.00 Demolition Plan.dwg

70.08

REMOVE AND RESET FENCE ⑦

| SHEET | EXISTING LOCATION | | | | | PROPOSED LOCATION | | | | REMARKS |
|---|---|---|---|---|---|---|---|---|---|---|
| | APPX BEGIN STATION | APPX BEGIN OFFSET (FT) | APPX END STATION | APPX END OFFSET (FT) | APPX BEGIN STATION | APPX BEGIN OFFSET (FT) | APPX END STATION | APPX END OFFSET (FT) | LENGTH (FT) | |
| B1 | 105+11.2 | 23.8 LT | 105+07.4 | 29.3 LT | 8.5 | 30.0 LT | 104+97.1 | 38.5 LT | 8.5 | |
| B1 | 105+07.4 | 29.3 LT | 105+18.3 | 34.0 LT | 10.0 | 38.5 LT | 105+07.1 | 38.5 LT | 10.0 | |
| B1 | 105+18.3 | 34.0 LT | 105+25.9 | 23.6 LT | 8.5 | 38.5 LT | 105+07.1 | 30.0 LT | 8.5 | |
| | | | | | | | | | | |
| B2 | 110+32.1 | 29.9 LT | 111+30.3 | 30.6 LT | 110+32.1 | 30.0 LT | 111+30.3 | 30.0 LT | 98.2 | |
| B2 | 111+71.4 | 29.6 LT | 111+89.0 | 29.8 LT | 111+71.4 | 29.6 LT | 111+89.0 | 29.8 LT | 17.6 | |
| B2 | 112+22.6 | 29.8 RT | 112+36.1 | 39.7 RT | 112+22.6 | 29.8 RT | 112+36.1 | 39.7 RT | 13.4 | |
| B2 | 112+36.1 | 29.7 RT | 112+44.4 | 38.0 RT | 112+36.1 | 29.7 RT | 112+44.4 | 38.0 RT | 11.7 | |
| B3 | 114+20.3 | 29.7 LT | 114+34.3 | 29.5 LT | 114+20.3 | 29.7 LT | 114+34.3 | 29.5 LT | 14.1 | |
| | | | | | | | | | | |
| B5 | 130+04.7 | 58.4 RT | 130+07.7 | 68.5 RT | 130+13.9 | 59.0 RT | 130+07.7 | 68.5 RT | 10.5 | |
| B5 | 130+07.7 | 68.5 RT | 130+20.7 | 65.1 RT | 130+07.7 | 68.5 RT | 130+29.9 | 65.7 RT | 13.4 | |
| B5 | 130+20.7 | 65.1 RT | 130+18.0 | 54.9 RT | 130+29.9 | 65.7 RT | 130+27.2 | 55.5 RT | 10.6 | |
| B5 | 130+18.0 | 54.9 RT | 130+04.7 | 58.4 RT | 130+27.2 | 55.5 RT | 130+13.9 | 59.0 RT | 13.7 | |

NOTES:

1. PROVIDE TEMPORARY FENCING PER SECTION 70.22 FOR ALL FENCES REMOVED OR AS DIRECTED BY THE ENGINEER.
2. STAKE RESET FENCE LAYOUT IN THE FIELD FOR ENGINEER TO REVIEW AND APPROVE PRIOR TO INSTALLATION. THIS WORK SHALL BE INCIDENTAL TO SECTION 70.08 PAY ITEM.

File: J:\JobsData\10138.00 W 32nd And E 33rd Avenue Upgrade\00 CADD\01 Working Set\01 Civil\01 Design\10138.00 Demolition Plan.dwg

**RECORD DRAWING**

1. DATA PROVIDED BY: _____ TITLE: _____
   THIS WILL SERVE TO CERTIFY THAT THESE RECORD DRAWINGS ARE A TRUE AND ACCURATE REPRESENTATION OF THE PROJECT AS CONSTRUCTED.
   CONTRACTOR: _____
   BY: _____ TITLE: _____ DATE: _____
2. DATA TRANSFERRED BY: _____ TITLE: _____
   COMPANY: _____ DATE: _____
3. BASED ON PERIODIC FIELD OBSERVATIONS BY THE ENGINEER (OR AN INDIVIDUAL UNDER HIS/HER DIRECT SUPERVISION), THE CONTRACTOR-PROVIDED DATA APPEARS TO REPRESENT THE PROJECT AS CONSTRUCTED.
   DATA TRANSFER CHECKED BY: _____ TITLE: _____
   COMPANY: _____ DATE: _____
   BY: _____

| DATA | DRAWN BY | CHECKED BY |
|---|---|---|
| BASE | TS | MJ |
| TOPOGRAPHY | BW | BW |
| PROFILE | AA | JK |
| STORM SEWER | MV | JH |
| WATER/SANITARY SEWER | CB | JK |
| GAS | CB | JK |
| TELEPHONE | CB | JK |
| ELECTRIC | JH | TK |
| DESIGN | AA | JK |
| QUANTITIES | AA | JK |
| PRELIMINARY/FINAL | AA | JK |
| MUNICIPAL/STATE | AA | JK |

PLAN CHECK

| FIELD BOOKS | BM NO. | LOCATION | ELEV. |
|---|---|---|---|
| DESIGN CRW BOOK No. 149, 169, | CB 7D | See MOA Benchmark Book, Page D-56 | 94.77 |
| 195 & 196 | CB 7C | See MOA Benchmark Book, Page D-17 | 106.10 |
| STAKING | GAAB 86 | See MOA Benchmark Book, Page D-18 | 104.53 |
| ASBUILT | | | |
| CONTRACTOR | BASIS OF THIS DATUM GAAB 1972 ADJUST | | |
| INSPECTOR | | | |

CONSTRUCTION RECORD

VERTICAL DATUM

| REV | DATE | DESCRIPTION | BY |
|---|---|---|---|
| | | | |

REVISIONS

CRW ENGINEERING GROUP, LLC
3940 ARCTIC BLVD. SUITE 300
ANCHORAGE, ALASKA 99503
PHONE: (907) 562-3252
#AECL882-AK

CONSULTANT

STATE OF ALASKA 49TH
Justin T. Keene
CE-11775
REGISTERED PROFESSIONAL ENGINEER

SEAL

MUNICIPALITY OF ANCHORAGE

PROJECT MANAGEMENT AND ENGINEERING DEPARTMENT

16-29 W. 32ND AVENUE & E. 33RD AVENUE UPGRADES ARCTIC BOULEVARD TO OLD SEWARD HIGHWAY ALL

DEMOLTION SUMMARY TABLES

SCALE HOR. N/A VER. N/A | GRID SW1629, SW1630, SW1631 | DATE JAN 2020 | STATUS 65% | SHEET B14 of B17

70.11

## REMOVE AND SALVAGE SIGNS ⑧

| SHEET | APPX STATION | APPX OFFSET (FT) | SIGN TYPE | LEGEND | SIGN POST | REMARKS |
|---|---|---|---|---|---|---|
| B1 | 100+41 | 29.6 LT | R1-1 | STOP | PERFORATED STEEL TUBE | |
| | | | D3-1D | ARCTIC BLVD | | |
| | | | D3-1D | W. 32ND AVE | | |
| B1 | 100+49 | 24.8 RT | R3-17 | BIKE LANE | PERFORATED STEEL TUBE | |
| | | | R3-9AP-SP | BEGIN | | |
| B1 | 101+83 | 23.7 RT | R7-9A | NO PARKING SYMBOL, BIKE LANE | PERFORATED STEEL TUBE | |
| B1 | 102+58 | 25.5 LT | SPECIAL | NO PARKING | WOOD BOLLARD | |
| B1 | 103+22 | 29.4 LT | R1-1 | STOP | PERFORATED STEEL TUBE | |
| B1 | 103+64 | 36.0 RT | R1-1 | STOP | PERFORATED STEEL TUBE | |
| | | | D3-1D | BERING ST | | |
| | | | D3-1D | W. 32ND AVE | | |
| B1 | 103+81 | 24.3 RT | R2-1 | SPEED LIMIT 25 | PERFORATED STEEL TUBE | |
| | | | SPECIAL | KIDS AT PLAY | | |
| B1 | 104+80 | 23.6 RT | R7-9A | NO PARKING SYMBOL, BIKE LANE | PERFORATED STEEL TUBE | |
| B1 | 105+44 | 34.3 LT | R7-8 | RESERVED PARKING | PERFORATED STEEL TUBE | |
| B1 | 105+59 | 27.3 RT | R1-1 | STOP | PERFORATED STEEL TUBE | |
| | | | D3-1D | MONTCLAIRE ST | | |
| | | | D3-1D | W. 32ND AVE | | |
| B1 | 105+94 | 24.0 LT | R7-9A | NO PARKING SYMBOL, BIKE LANE | PERFORATED STEEL TUBE | |
| B1 | 106+08 | 34.3 LT | R7-9A | NO PARKING SYMBOL, BIKE LANE | PERFORATED STEEL TUBE | |
| | | | | | | |
| B2 | 106+50 | 37.9 LT | R1-1 | STOP | PERFORATED STEEL TUBE | |
| | | | D3-1D | CHEECHAKO ST | | |
| | | | D3-1D | W. 32ND AVE | | |
| B2 | 109+11 | 28.5 RT | SPECIAL | NOTICE (NO TRESPASSING) | PERFORATED STEEL TUBE | |
| | | | SPECIAL | SECURITY | | |
| B2 | 109+57 | 35.9 LT | R1-1 | STOP | PERFORATED STEEL TUBE | |
| | | | D3-1D | DAWSON ST | | |
| | | | D3-1D | W. 32ND AVE | | |
| B2 | 110+68 | 24.1 RT | R7-9A | NO PARKING SYMBOL, BIKE LANE | PERFORATED STEEL TUBE | |
| B2 | 111+66 | 22.6 RT | R1-1 | STOP | PERFORATED STEEL TUBE | |
| | | | D3-1D | MONTPELIER CT | | |
| | | | D3-1D | W. 32ND AVE | | |
| | | | SPECIAL | NO PARKING ON STREET | | |
| B2 | 112+06 | 24.2 LT | R7-9A | NO PARKING SYMBOL, BIKE LANE | PERFORATED STEEL TUBE | |
| B2 | 112+69 | 32.5 LT | R1-1 | STOP | PERFORATED STEEL TUBE | |
| B2 | 113+22 | 36.7 RT | R1-1 | STOP | PERFORATED STEEL TUBE | |
| | | | D3-1D | EUREKA ST | | |
| | | | D3-1D | W. 32ND AVE | | |
| B2 | 113+48 | 23.6 RT | R7-9A | NO PARKING SYMBOL, BIKE LANE | PERFORATED STEEL TUBE | |
| B2 | 114+88 | 24.1 LT | R7-9A | NO PARKING SYMBOL, BIKE LANE | PERFORATED STEEL TUBE | |
| | | | | | | |
| B3 | 115+52 | 33.6 LT | R1-1 | STOP | PERFORATED STEEL TUBE | |
| | | | D3-1D | EIDE ST | | |
| | | | D3-1D | W. 32ND AVE | | |
| B3 | 116+20 | 24.1 RT | R7-9A | NO PARKING SYMBOL, BIKE LANE | PERFORATED STEEL TUBE | |
| B3 | 117+34 | 31.1 LT | SPECIAL | EMPLOYEE PARKING ONLY | PERFORATED STEEL TUBE | |
| B3 | 117+55 | 24.2 LT | R7-9A | NO PARKING SYMBOL, BIKE LANE | PERFORATED STEEL TUBE | |
| B3 | 118+36 | 31.6 RT | SPECIAL | PRIVATE PROPERTY | PERFORATED STEEL TUBE | |
| | | | SPECIAL | NO THOROUGHFARE | | |
| B3 | 119+03 | 23.8 LT | R2-1 | SPEED LIMIT 25 | PERFORATED STEEL TUBE | |
| | | | SPECIAL | KIDS AT PLAY | | |

70.11

## REMOVE AND SALVAGE SIGNS ⑧

| SHEET | APPX STATION | APPX OFFSET (FT) | SIGN TYPE | LEGEND | SIGN POST | REMARKS |
|---|---|---|---|---|---|---|
| B3 | 119+55 | 23.9 LT | R3-17 | BIKE LANE | PERFORATED STEEL TUBE | |
| B3 | 120+94 | 28.8 LT | SPECIAL | NO THOROUGH TRAFFIC | PERFORATED STEEL TUBE | |
| B3 | 120+97 | 25.2 RT | R1-1 | STOP | PERFORATED STEEL TUBE | |
| | | | | | | |
| B4 | 121+03 | 23.8 LT | R7-1 | NO PARKING | PERFORATED STEEL TUBE | |
| B4 | 123+12 | 29.5 LT | SPECIAL | NO THOROUGH TRAFFIC | PERFORATED STEEL TUBE | |
| B4 | 123+69 | 24.7 RT | R7-1 | NO PARKING ANYTIME | PERFORATED STEEL TUBE | |
| B4 | 123+76 | 24.5 LT | R7-1 | NO PARKING ANYTIME | PERFORATED STEEL TUBE | |
| B4 | 125+83 | 27.5 RT | R10-3B | CROSSWALK | PERFORATED STEEL TUBE | |
| | | | R10-3B | CROSSWALK | | |
| B4 | 126+92 | 31.1 LT | D3-1 | 32ND AVENUE | LIGHT/SIGNAL POLE | |
| | | | R10-3B | CROSSWALK | | |
| | | | R10-3B | CROSSWALK | | |
| | | | | | | |
| B5 | 128+80 | 20.1 LT | R3-8 | LANE CONTROL SIGN | PERFORATED STEEL TUBE | |
| B5 | 129+51 | 34.5 RT | R1-1 | STOP | PERFORATED STEEL TUBE | |
| B5 | 131+86 | 38.1 RT | R1-1 | STOP | PERFORATED STEEL TUBE | |
| | | | | | | |
| B6 | 133+43 | 29.6 LT | R1-1 | STOP | PERFORATED STEEL TUBE | |
| B6 | 133+81 | 30.6 RT | R5-2 | NO TRUCKS | PERFORATED STEEL TUBE | |
| B6 | 137+55 | 03.9 LT | R4-7 | AROUND CURB | PERFORATED STEEL TUBE | |
| | | | SPECIAL | YELLOW DIMOND | | |
| | | | SPECIAL | YELLOW DIMOND | | |
| B6 | 138+02 | 04.2 RT | R6-2R | ONE WAY | PERFORATED STEEL TUBE | |
| B6 | 138+11 | 03.9 LT | R4-7 | AROUND CURB | PERFORATED STEEL TUBE | |
| | | | SPECIAL | YELLOW DIMOND | | |
| | | | SPECIAL | YELLOW DIMOND | | |
| B6 | 138+13 | 32.2 RT | R1-1 | STOP | PERFORATED STEEL TUBE | |
| B6 | 138+48 | 32.7 RT | R3-8 | LANE CONTROL SIGN | PERFORATED STEEL TUBE | |
| B6 | 139+36 | 57.0 RT | R1-1 | STOP | PERFORATED STEEL TUBE | |
| B6 | 139+53 | 31.7 LT | R3-8 | LANE CONTROL SIGN | PERFORATED STEEL TUBE | |
| B6 | 139+60 | 00.9 RT | R4-7 | KEEP RIGHT | PERFORATED STEEL TUBE | |
| | | | SPECIAL | YELLOW DIMOND | | |
| | | | SPECIAL | YELLOW DIMOND | | |
| | | | | | | |
| B7 | 141+32 | 24.7 LT | R3-8 | LANE CONTROL SIGN | PERFORATED STEEL TUBE | |
| B7 | 143+98 | 39.6 RT | R1-1 | STOP | PERFORATED STEEL TUBE | |
| | | | E5-3 | EXIT ONLY | | |
| | | | | | | |
| B8 | 149+41 | 38.6 RT | R1-1 | STOP | PERFORATED STEEL TUBE | |
| | | | D3-1D | FAIRBANKS ST | | |
| | | | D3-1D | E 33RD AVE | | |
| B8 | 150+76 | 20.3 RT | W1-2A | RIGHT TURN 15 MPH | PERFORATED STEEL TUBE | |
| | | | | | | |
| B9 | 304+12 | 25.6 RT | R1-1 | STOP | PERFORATED STEEL TUBE | |
| | | | D3-1D | FAIRBANKS ST | | |
| | | | D3-1D | E 34TH AVE | | |
| | | | | | | |
| B10 | 404+24 | 28.1 RT | R1-1 | STOP | PERFORATED STEEL TUBE | |
| | | | D3-1D | FAIRBANKS ST | | |
| | | | D3-1D | E 33RD AVE | | |

NOTE: WORK TO REMOVE AND SALVAGE EXISTING SIGNS & POSTS SHALL BE INCIDENTAL TO 70.11 STANDARD SIGN PAY ITEM.

**RECORD DRAWING**

1. DATA PROVIDED BY: _____ TITLE: _____
   THIS WILL SERVE TO CERTIFY THAT THESE RECORD DRAWINGS ARE A TRUE AND ACCURATE REPRESENTATION OF THE PROJECT AS CONSTRUCTED.
   CONTRACTOR: _____
   BY: _____ TITLE: _____ DATE: _____
2. DATA TRANSFERRED BY: _____ TITLE: _____
   COMPANY: _____ DATE: _____
3. BASED ON PERIODIC FIELD OBSERVATIONS BY THE ENGINEER (OR AN INDIVIDUAL UNDER HIS/HER DIRECT SUPERVISION), THE CONTRACTOR-PROVIDED DATA APPEARS TO REPRESENT THE PROJECT AS CONSTRUCTED.
   DATA TRANSFER CHECKED BY: _____ TITLE: _____
   COMPANY: _____ DATE: _____
   BY: _____

| DATA | DRAWN BY | CHECKED BY |
|---|---|---|
| BASE | TS | MJ |
| TOPOGRAPHY | BW | BW |
| PROFILE | AA | JK |
| STORM SEWER | MV | JH |
| WATER/SANITARY SEWER | CB | JK |
| GAS | CB | JK |
| TELEPHONE | CB | JK |
| ELECTRIC | JH | TK |
| DESIGN | AA | JK |
| QUANTITIES | AA | JK |
| PRELIMINARY/FINAL | AA | JK |
| MUNICIPAL/STATE | AA | JK |

PLAN CHECK

| FIELD BOOKS | BM NO. | LOCATION | ELEV. |
|---|---|---|---|
| DESIGN CRW BOOK No. 149, 169, | CB 7D | See MOA Benchmark Book, Page D-56 | 94.77 |
| 195 & 196 | CB 7C | See MOA Benchmark Book, Page D-17 | 106.10 |
| STAKING | GAAB 86 | See MOA Benchmark Book, Page D-18 | 104.53 |
| ASBUILT | | | |
| CONTRACTOR | BASIS OF THIS DATUM GAAB 1972 ADJUST | | |
| INSPECTOR | | | |

CONSTRUCTION RECORD — VERTICAL DATUM

| REV | DATE | DESCRIPTION | BY |
|---|---|---|---|
| | | | |

REVISIONS

CRW ENGINEERING GROUP, LLC
3940 ARCTIC BLVD. SUITE 300
ANCHORAGE, ALASKA 99503
PHONE: (907) 562-3252
@ECLB62-AK

CONSULTANT

STATE OF ALASKA 49TH — Justin T. Keene CE-11775 — REGISTERED PROFESSIONAL ENGINEER

SEAL

MUNICIPALITY OF ANCHORAGE

PROJECT MANAGEMENT AND ENGINEERING DEPARTMENT

16-29 W. 32ND AVENUE & E. 33RD AVENUE UPGRADES ARCTIC BOULEVARD TO OLD SEWARD HIGHWAY — ALL

# DEMOLTION SUMMARY TABLES

SCALE HOR. N/A VER. N/A | GRID SW1629, SW1630, SW1631 | DATE JAN 2020 | STATUS 65% | SHEET B15 of B17

File:J:\Jobs8Data\10138.00 W 32nd And E 33rd Avenue Upgrade\00 CADD\01 Working Set\01 Civil\01 Design\10138.00 Demolition Plan.dwg

## 70.11

### REMOVE AND RELOCATE SIGNS (10)

| SHEET | APPX STATION | APPX OFFSET (FT) | SIGN TYPE | LEGEND | SIGN POST | REMARKS |
|---|---|---|---|---|---|---|
| B1 | 102+33 | 25.1 LT | SPECIAL | NO PARKING | WOOD BOLLARD | |
| | | | | | | |
| B2 | 106+53 | 23.3 RT | SPECIAL | NOTICE/WARNING | PERFORATED STEEL TUBE | |
| | | | SPECIAL | SECURITY PATROL SERVICES | | |
| | | | SPECIAL | PET WASTE | | |
| B2 | 111+24 | 26.1 RT | SPECIAL | NOTICE/WARNING | PERFORATED STEEL TUBE | |
| | | | R8-3 | SECURITY PATROL SERVICES | | |
| | | | | | | |
| B3 | 119+45 | 27.9 LT | SPECIAL | CUSTOMER PARKING ONLY | PERFORATED STEEL TUBE | |
| | | | | | | |
| B4 | VARIES | VARIES | SPECIAL | RESERVED PARKING | PERFORATED STEEL TUBE | |
| | | | | | | |
| B7 | 146+60 | 24.7 RT | SPECIAL | EMPLOYEE PARKING ONLY | PERFORATED STEEL TUBE | |

## 70.13

### REMOVE BOLLARD (11)

| SHEET | STATION | OFFSET (FT) | REMOVE WOOD BOLLARD | REMOVE METAL BOLLARD | REMARKS |
|---|---|---|---|---|---|
| B1 | 101+73 | 24.4 LT | X | | |
| B1 | 101+78 | 24.6 LT | X | | |
| B1 | 101+83 | 25.3 LT | X | | |
| B1 | 101+87 | 23.0 RT | | X | |
| B1 | 101+88 | 24.7 LT | X | | |
| B1 | 101+91 | 23.3 RT | | X | |
| B1 | 101+93 | 24.9 LT | X | | |
| B1 | 101+98 | 24.6 LT | X | | |
| B1 | 102+03 | 24.7 LT | X | | |
| B1 | 102+08 | 24.7 LT | X | | |
| B1 | 102+13 | 24.7 LT | X | | |
| B1 | 102+18 | 24.9 LT | X | | |
| B1 | 102+23 | 24.7 LT | X | | |
| B1 | 102+28 | 24.6 LT | X | | |
| B1 | 102+33 | 24.7 LT | X | | |
| B1 | 102+38 | 24.7 LT | X | | |
| B1 | 102+52 | 24.8 LT | X | | |
| B1 | 102+58 | 25.1 LT | X | | |
| B1 | 102+62 | 24.7 LT | X | | |
| B1 | 102+68 | 24.7 LT | X | | |
| B1 | 102+73 | 24.4 LT | X | | |
| B1 | 102+78 | 24.7 LT | X | | |
| B1 | 102+83 | 24.6 LT | X | | |
| B1 | 102+88 | 24.4 LT | X | | |
| B1 | 102+92 | 24.6 LT | X | | |
| B1 | 102+98 | 24.4 LT | X | | |
| B1 | 103+03 | 24.6 LT | X | | |
| B1 | 103+08 | 24.6 LT | X | | |
| B1 | 103+11 | 27.9 LT | X | | |
| | | | | | |
| B4 | 125+78 | 21.7 RT | | X | |
| B4 | 125+84 | 26.1 RT | | X | |

## 70.13

### REMOVE AND RESET BOLLARD GATE (12)

| SHEET | EXISTING LOCATION | | | | | PROPOSED LOCATION | | | | REMARKS |
|---|---|---|---|---|---|---|---|---|---|---|
| | APPX BEGIN STATION | APPX BEGIN OFFSET (FT) | APPX END STATION | APPX END OFFSET (FT) | APPX BEGIN STATION | APPX BEGIN OFFSET (FT) | APPX END STATION | APPX END OFFSET (FT) | LENGTH (FT) | |
| B1 | 102+38.2 | 24.7 LT | 102+52.4 | 24.8 LT | 102+38.3 | 30.0 LT | 102+52.3 | 30.0 LT | 14.0 | |

## 70.22

### REMOVAL/DISPOSAL AND/OR SALVAGE OF OBSTRUCTIONS (13)

| SHEET | APPX STATION | APPX OFFSET (FT) | OBSTRUCTION ITEM | ACTION |
|---|---|---|---|---|
| B1 | 105+17 | 24.5 LT | GARGAGE BIN | MOVE ONTO PROPERTY BETWEEN PARCEL 103 & 104 |
| | | | | |
| B2 | 108+94 | 21.1 LT | RETAINING WALL | MOVE ONTO PARCEL 106 OR DISPOSE |
| B2 | 109+34 | 24.8 LT | METAL FRAME TENT | MOVE ONTO PARCEL 106 |
| | | | | |
| B3 | 117+31 | 25.7 RT | GARBAGE BIN | MOVE ONTO PARCEL 139 |
| | | | | |
| B5 | 130+39 | 46.8 RT | BOULDER | REMOVE FROM ROW |
| | | | | |
| B6 | 138+48 | 34.6 RT | RETAINING WALL | REMOVE & DISPOSE |
| B6/B7 | 139+99 | 29.7 LT | RETAINING WALL | REMOVE & DISPOSE |

**RECORD DRAWING**

1. DATA PROVIDED BY: _____ TITLE: _____
   THIS WILL SERVE TO CERTIFY THAT THESE RECORD DRAWINGS ARE A TRUE AND ACCURATE REPRESENTATION OF THE PROJECT AS CONSTRUCTED.
   CONTRACTOR: _____
   BY: _____ TITLE: _____ DATE: _____
2. DATA TRANSFERRED BY: _____ TITLE: _____
   COMPANY: _____ DATE: _____
3. BASED ON PERIODIC FIELD OBSERVATIONS BY THE ENGINEER (OR AN INDIVIDUAL UNDER HIS/HER DIRECT SUPERVISION), THE CONTRACTOR-PROVIDED DATA APPEARS TO REPRESENT THE PROJECT AS CONSTRUCTED.
   DATA TRANSFER CHECKED BY: _____ TITLE: _____
   COMPANY: _____ DATE: _____
   BY: _____

| DATA | DRAWN BY | CHECKED BY |
|---|---|---|
| BASE | TS | MJ |
| TOPOGRAPHY | BW | BW |
| PROFILE | AA | JK |
| STORM SEWER | MV | JH |
| WATER/SANITARY SEWER | CB | JK |
| GAS | CB | JK |
| TELEPHONE | CB | JK |
| ELECTRIC | JH | TK |
| DESIGN | AA | JK |
| QUANTITIES | AA | JK |
| PRELIMINARY/FINAL | AA | JK |
| MUNICIPAL/STATE | AA | JK |

PLAN CHECK

| FIELD BOOKS | BM NO. | LOCATION | ELEV. |
|---|---|---|---|
| DESIGN CRW BOOK No. 149, 169, | CB 7D | See MOA Benchmark Book, Page D-56 | 94.77 |
| 195 & 196 | CB 7C | See MOA Benchmark Book, Page D-17 | 106.10 |
| STAKING | GAAB 86 | See MOA Benchmark Book, Page D-18 | 104.53 |
| | | | |
| | | | |
| ASBUILT | | | |
| CONTRACTOR | BASIS OF THIS DATUM GAAB 1972 ADJUST | | |
| INSPECTOR | | | |

CONSTRUCTION RECORD

VERTICAL DATUM

| REV | DATE | DESCRIPTION | BY |
|---|---|---|---|
| | | | |
| | | | |
| | | | |
| | | | |
| | | | |
| | | | |
| | | | |
| | | | |

REVISIONS

CRW ENGINEERING GROUP, LLC
3940 ARCTIC BLVD. SUITE 300
ANCHORAGE, ALASKA 99503
PHONE: (907) 562-3252
#AECL882-AK

CONSULTANT

STATE OF ALASKA 49TH
Justin T. Keene
CE-11775
REGISTERED PROFESSIONAL ENGINEER

SEAL

MUNICIPALITY OF ANCHORAGE

PROJECT MANAGEMENT AND ENGINEERING DEPARTMENT

16-29 W. 32ND AVENUE & E. 33RD AVENUE UPGRADES ALL
ARCTIC BOULEVARD TO OLD SEWARD HIGHWAY

DEMOLTION SUMMARY TABLES

SCALE HOR. N/A VER. N/A | GRID SW1629, SW1630, SW1631 | DATE JAN 2020 | STATUS 65% | SHEET B16 of B17

File: J:\JobsData\10138.00 W 32nd And E 33rd Avenue Upgrade\00 CADD\01 Working Set\01 Civil\01 Design\10138.00 Demolition Plan.dwg

## 80.08

### REMOVE JUNCTION BOX (14)

| SHEET | APPX STATION | APPX OFFSET (FT) | REMARKS |
|---|---|---|---|
| B2 | 110+10.4 | 25.3 LT | ELECTRIC |
| | | | |
| B3 | 119+12.0 | 23.1 RT | LIGHTING |
| B3 | 119+43.5 | 23.4 RT | ELECTRIC |
| B3 | 119+67.7 | 33.7 LT | LIGHTING |
| B3 | 119+74.9 | 40.9 LT | LIGHTING |
| B3 | 120+33.0 | 29.8 LT | LIGHTING |
| B3 | 120+34.6 | 26.1 RT | LIGHTING |
| B3 | 120+54.2 | 24.9 LT | LIGHTING |
| | | | |
| B4 | 125+51.9 | 21.0 RT | LIGHTING |
| B4 | 125+84.8 | 32.6 LT | ELECTRIC |
| B4 | 125+88.0 | 39.5 RT | LIGHTING |
| B4 | 126+53.4 | 45.7 LT | LIGHTING |
| B4 | 126+66.8 | 38.6 RT | LIGHTING |
| B4 | 126+81.4 | 33.9 LT | ELECTRIC |
| B4 | 127+20.4 | 30.9 LT | ELECTRIC |
| B4 | 127+68.4 | 30.9 LT | ELECTRIC |
| | | | |
| B5 | 129+21.8 | 17.7 LT | ELECTRIC |
| B5 | 130+71.0 | 33.3 RT | ELECTRIC |
| B5 | 130+75.5 | 17.8 LT | ELECTRIC |
| | | | |
| B6 | 132+24.7 | 22.7 LT | ELECTRIC |
| B6 | 132+27.1 | 31.0 RT | ELECTRIC |
| B6 | 133+88.5 | 27.2 LT | ELECTRIC |
| B6 | 135+41.8 | 24.6 LT | ELECTRIC |
| B6 | 136+75.2 | 23.9 RT | ELECTRIC |
| B6 | 136+81.1 | 23.6 LT | ELECTRIC |
| B6 | 138+14.7 | 14.7 RT | ELECTRIC |
| B6 | 138+46.6 | 30.8 RT | LIGHTING |
| B6 | 138+64.9 | 48.6 LT | LIGHTING |
| B6 | 138+49.4 | 37.1 LT | LIGHTING |
| B6 | 139+87.5 | 27.7 LT | LIGHTING |

## 80.28

### REMOVE LUMINARE POLE (15)

| SHEET | APPX STATION | APPX OFFSET (FT) | REMARKS |
|---|---|---|---|
| B2 | 110+11.2 | 27.8 LT | |
| | | | |
| B3 | 117+08.8 | 26.7 LT | |
| B3 | 117+35.5 | 26.5 LT | |
| | | | |
| B4 | 127+67.7 | 31.8 LT | |
| | | | |
| B5 | 129+21.7 | 19.9 LT | |
| B5 | 130+70.8 | 36.2 RT | |
| B5 | 132+27.0 | 34.4 RT | |
| | | | |
| B6 | 133+86.0 | 27.4 LT | |
| B6 | 135+41.1 | 27.4 LT | |
| B6 | 136+76.3 | 26.3 RT | |

## 80.28

### REMOVE LOAD CENTER (16)

| SHEET | APPX STATION | APPX OFFSET (FT) | REMARKS |
|---|---|---|---|
| B3 | 119+53.7 | 28.3 LT | |
| | | | |
| B4 | 127+21.3 | 34.8 LT | |
| | | | |
| B6 | 138+33.6 | 34.0 LT | |

## 80.28

### REMOVE SIGNAL MAST ARM OR COMBINATION POLE (17)

| SHEET | APPX STATION | APPX OFFSET (FT) | REMARKS |
|---|---|---|---|
| B3 | 120+38.2 | 25.6 RT | |
| | | | |
| B4 | 126+78.1 | 33.0 RT | |
| | | | |
| B5 | 130+69.8 | 30.7 RT | |
| | | | |
| B6 | 138+53.6 | 35.5 RT | |

## 80.28

### REMOVE SIGNAL PEDESTAL/PEDESTRIAN POLE (18)

| SHEET | APPX STATION | APPX OFFSET (FT) | REMARKS |
|---|---|---|---|
| B3 | 120+36.3 | 28.8 LT | |
| | | | |
| B4 | 125+77.8 | 32.9 RT | |

## 80.28

### REMOVE TRAFFIC CONTROLLER CABINET (19)

| SHEET | APPX STATION | APPX OFFSET (FT) | REMARKS |
|---|---|---|---|
| B3 | 115+41.8 | 27.5 LT | |
| B3 | 119+66.1 | 34.0 LT | |

**RECORD DRAWING**

1. DATA PROVIDED BY: _____ TITLE: _____
   THIS WILL SERVE TO CERTIFY THAT THESE RECORD DRAWINGS ARE A TRUE AND ACCURATE REPRESENTATION OF THE PROJECT AS CONSTRUCTED.
   CONTRACTOR: _____
   BY: _____ TITLE: _____ DATE: _____
2. DATA TRANSFERRED BY: _____ TITLE: _____
   COMPANY: _____ DATE: _____
3. BASED ON PERIODIC FIELD OBSERVATIONS BY THE ENGINEER (OR AN INDIVIDUAL UNDER HIS/HER DIRECT SUPERVISION), THE CONTRACTOR-PROVIDED DATA APPEARS TO REPRESENT THE PROJECT AS CONSTRUCTED.
   DATA TRANSFER CHECKED BY: _____ TITLE: _____
   COMPANY: _____ DATE: _____
   BY: _____

| DATA | DRAWN BY | CHECKED BY |
|---|---|---|
| BASE | TS | MJ |
| TOPOGRAPHY | BW | BW |
| PROFILE | AA | JK |
| STORM SEWER | MV | JH |
| WATER/SANITARY SEWER | CB | JK |
| GAS | CB | JK |
| TELEPHONE | CB | JK |
| ELECTRIC | JH | TK |
| DESIGN | AA | JK |
| QUANTITIES | AA | JK |
| PRELIMINARY/FINAL | AA | JK |
| MUNICIPAL/STATE | AA | JK |

PLAN CHECK

| FIELD BOOKS | BM NO. | LOCATION | ELEV. |
|---|---|---|---|
| DESIGN CRW BOOK No. 149, 169, | CB 7D | See MOA Benchmark Book, Page D-56 | 94.77 |
| 195 & 196 | CB 7C | See MOA Benchmark Book, Page D-17 | 106.10 |
| STAKING | GAAB 86 | See MOA Benchmark Book, Page D-18 | 104.53 |
| | | | |
| | | | |
| ASBUILT | | | |
| CONTRACTOR | BASIS OF THIS DATUM GAAB 1972 ADJUST | | |
| INSPECTOR | | | |

CONSTRUCTION RECORD — VERTICAL DATUM

| REV | DATE | DESCRIPTION | BY |
|---|---|---|---|
| | | | |
| | | | |
| | | | |
| | | | |
| | | | |
| | | | |
| | | | |
| | | | |
| | | | |

REVISIONS

CRW ENGINEERING GROUP, LLC
3940 ARCTIC BLVD. SUITE 300
ANCHORAGE, ALASKA 99503
PHONE: (907) 562-3252
#AECL882-AK

CONSULTANT

STATE OF ALASKA — 49 TH — Justin T. Keene CE-11775 — REGISTERED PROFESSIONAL ENGINEER

SEAL

MUNICIPALITY OF ANCHORAGE

PROJECT MANAGEMENT AND ENGINEERING DEPARTMENT

16-29 W. 32ND AVENUE & E. 33RD AVENUE UPGRADES — ALL
ARCTIC BOULEVARD TO OLD SEWARD HIGHWAY

DEMOLTION SUMMARY TABLES

SCALE HOR. N/A VER. N/A | GRID SW1629, SW1630, SW1631 | DATE JAN 2020 | STATUS 65% | SHEET B17 of B17

File: J:\JobsDate\10138.00 W 32nd And E 33rd Avenue Upgrade\00 CADD\01 Working Set\01 Civil\01 Design\10138.00 Demolition Plan.dwg

**SHEET NOTES:**

1. SEE SHEET C3 FOR TYPICAL SECTION SUMMARY TABLE. THE STATION RANGES ARE APPROXIMATE AND MAY BE MODIFIED IN THE FIELD BY THE ENGINEER.
2. SEE SHEET C3 FOR TYPICAL LOCATIONS OF STORM DRAIN AND BOTTOM OF SUBGRADE SLOPE.

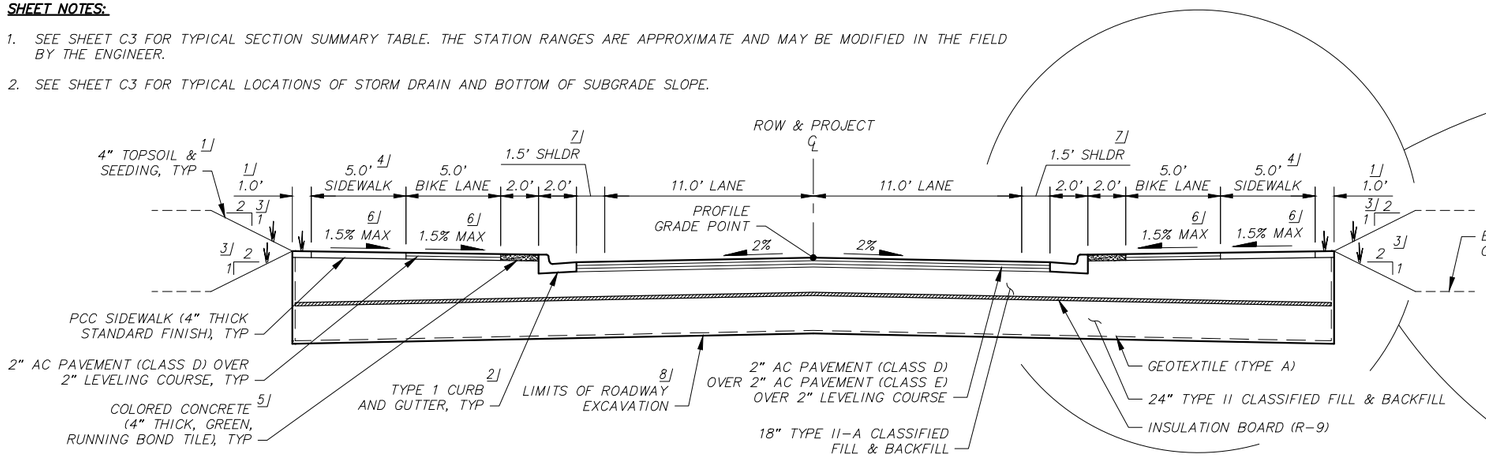


## TYPICAL SECTION "A" - W. 32ND / E. 33RD AVENUE & CALAIS DRIVE

1

SEE NOTES 1 AND 2

**#/ FOOT NOTES:**

1. PLACE 4" OF TOPSOIL AND SEEDING (SCHEDULE A) ON ALL DISTURBED AREAS, SEE LANDSCAPING SHEETS FOR DETAILS.
2. TOP AC PAVEMENT SHALL BE 1/8" – 1/4" ABOVE LIP OF CURB, UNLESS OTHERWISE NOTED. SEE DETAIL 3, SHEET C8. INSTALL STEEL CURB FACING ON TYPE 1 CURB AND GUTTER TRANSITIONS PER DETAIL 2, SHEET D5.
3. THE MAXIMUM (STEEPEST) AND TYPICAL CUT/FILL SLOPES ARE 2 (HORIZONTAL) : 1 (VERTICAL). FILL SLOPES MAY VARY ALONG ROADWAY TO PROVIDE POSITIVE DRAINAGE TOWARD ROADWAY. SEE DETAIL 2, SHEET C8. SEE ROADWAY SHEETS FOR LOCATIONS. THE ENGINEER MAY ADJUST THE TYPICAL SLOPES IN THE FIELD.
4. INCREASE SIDEWALK THICKNESS TO 6" ACROSS ALL DRIVEWAYS & ADD WELDED STEEL WIRE REINFORCEMENT PER THE SPECIFICATIONS.
5. INCREASE BUFFER THICKNESS TO 6" ACROSS ALL DRIVEWAYS AND PROVIDE PCC SIDEWALK WITH STANDARD FINISH INSTEAD OF COLORED CONCRETE.
6. THE MAXIMUM BIKE LANE/SIDEWALK GRADE IS 2% AT DRIVEWAYS.
7. SHOULDER WIDTH VARIES FOR TRANSITIONS BETWEEN TYPICAL SECTIONS, SEE INTERSECTION LAYOUT SHEETS FOR CURB LAYOUT AND NECKDOWN/PARKING TRANSITIONS.
8. PRIOR TO PLACEMENT OF FILL, NATIVE MATERIAL SHALL BE SCARIFIED, PROOF-ROLLED AND COMPACTED AS DIRECTED BY ENGINEER. THIS WORK SHALL BE INCIDENTAL TO THE CONTRACT AND NO SEPARATE PAYMENT SHALL BE MADE.

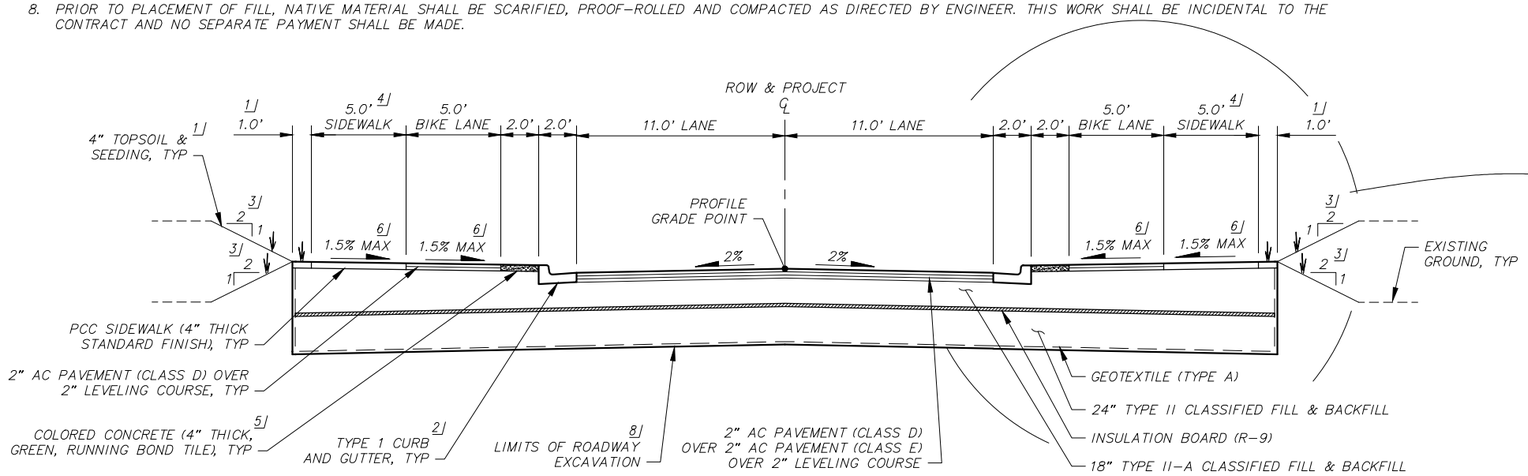


## TYPICAL SECTION "B" - W. 32ND AVENUE NECKDOWN & FAIRBANKS STREET

2

SEE NOTES 1 AND 2

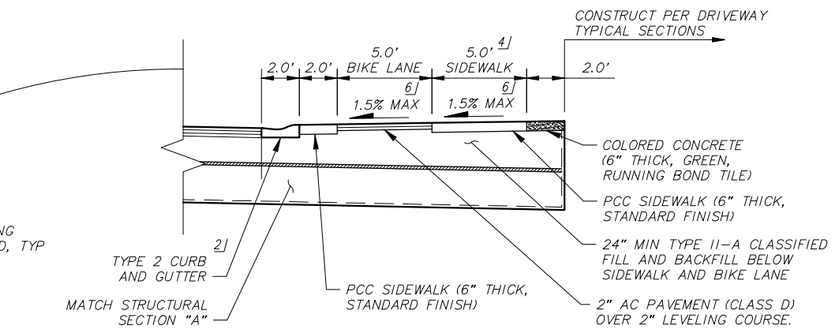


## TYPICAL SECTION "A1" W. 32ND / E. 33RD AVENUE & CALAIS DRIVE

3

SEE NOTES 1 AND 2

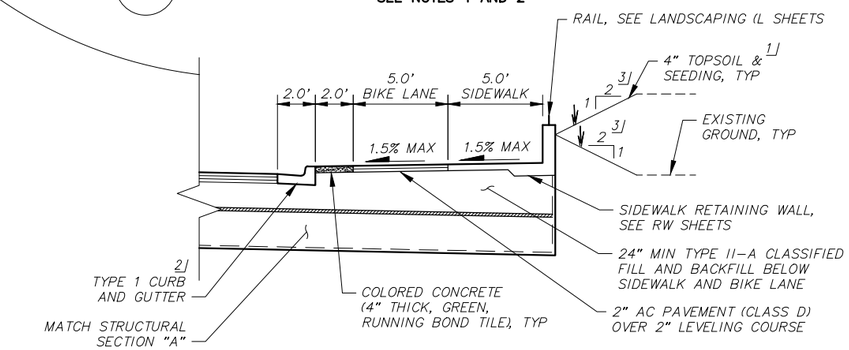


## TYPICAL SECTION "A2" W. 32ND / E. 33RD AVENUE & CALAIS DRIVE

4

SEE NOTES 1 AND 2

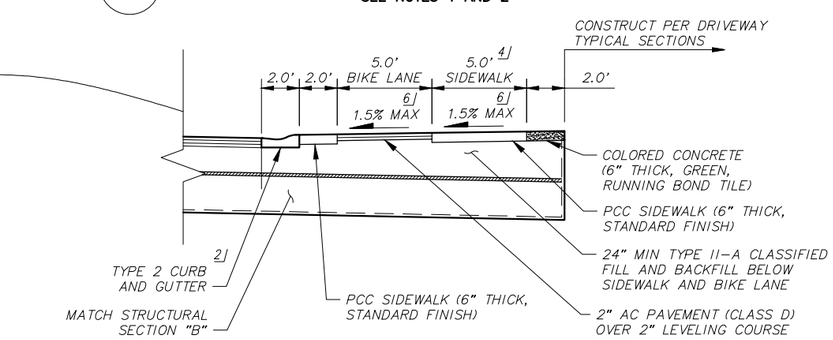


## TYPICAL SECTION "B1" W. 32ND AVENUE NECKDOWN & FAIRBANKS STREET

5

SEE NOTES 1 AND 2

**RECORD DRAWING**

1. DATA PROVIDED BY: _____ TITLE: _____
   THIS WILL SERVE TO CERTIFY THAT THESE RECORD DRAWINGS ARE A TRUE AND ACCURATE REPRESENTATION OF THE PROJECT AS CONSTRUCTED.
   CONTRACTOR: _____
   BY: _____ TITLE: _____ DATE: _____
2. DATA TRANSFERRED BY: _____ TITLE: _____
   COMPANY: _____ DATE: _____
3. BASED ON PERIODIC FIELD OBSERVATIONS BY THE ENGINEER (OR AN INDIVIDUAL UNDER HIS/HER DIRECT SUPERVISION), THE CONTRACTOR-PROVIDED DATA APPEARS TO REPRESENT THE PROJECT AS CONSTRUCTED.
   DATA TRANSFER CHECKED BY: _____ TITLE: _____
   COMPANY: _____ DATE: _____
   BY: _____

| DATA | DRAWN BY | CHECKED BY |
|---|---|---|
| BASE | TS | MJ |
| TOPOGRAPHY | BW | BW |
| PROFILE | AA | JK |
| STORM SEWER | MV | JH |
| WATER/SANITARY SEWER | CB | JK |
| GAS | CB | JK |
| TELEPHONE | CB | JK |
| ELECTRIC | JH | TK |
| DESIGN | AA | JK |
| QUANTITIES | AA | JK |
| PRELIMINARY/FINAL | AA | JK |
| MUNICIPAL/STATE | AA | JK |
| PLAN CHECK | | |

| FIELD BOOKS | BM NO. | LOCATION | ELEV. |
|---|---|---|---|
| DESIGN CRW BOOK No. 149, 169, | CB 7D | See MOA Benchmark Book, Page D-56 | 94.77 |
| 195 & 196 | CB 7C | See MOA Benchmark Book, Page D-17 | 106.10 |
| STAKING | GAAB 86 | See MOA Benchmark Book, Page D-18 | 104.53 |
| ASBUILT | | | |
| CONTRACTOR | BASIS OF THIS DATUM GAAB 1972 ADJUST | | |
| INSPECTOR | | | |

CONSTRUCTION RECORD — VERTICAL DATUM

| REV | DATE | DESCRIPTION | BY |
|---|---|---|---|
| | | | |

REVISIONS

CRW ENGINEERING GROUP, LLC
3940 ARCTIC BLVD. SUITE 300
ANCHORAGE, ALASKA 99503
PHONE: (907) 562-3252
#AECL882-AK
CONSULTANT

STATE OF ALASKA 49TH Justin T. Keene CE-11775 REGISTERED PROFESSIONAL ENGINEER
SEAL

MUNICIPALITY OF ANCHORAGE

PROJECT MANAGEMENT AND ENGINEERING DEPARTMENT

16-29 W. 32ND AVENUE & E. 33RD AVENUE UPGRADES SCHED A
ARCTIC BOULEVARD TO OLD SEWARD HIGHWAY

TYPICAL SECTIONS

W. 32ND AVENUE/CALAIS DRIVE/ E. 33RD AVENUE

SCALE HOR. N/A VER. N/A | GRID SW1629, SW1630, SW1631 | DATE JAN 2020 | STATUS 65% | SHEET C1 of C8

File:J:\Jobs\Data\10138.00 W 32nd And E 33rd Avenue Upgrade\00 CADD\01 Working Set\01 Civil\01 Design\10138.00 Typical Sections - Phase 2.dwg

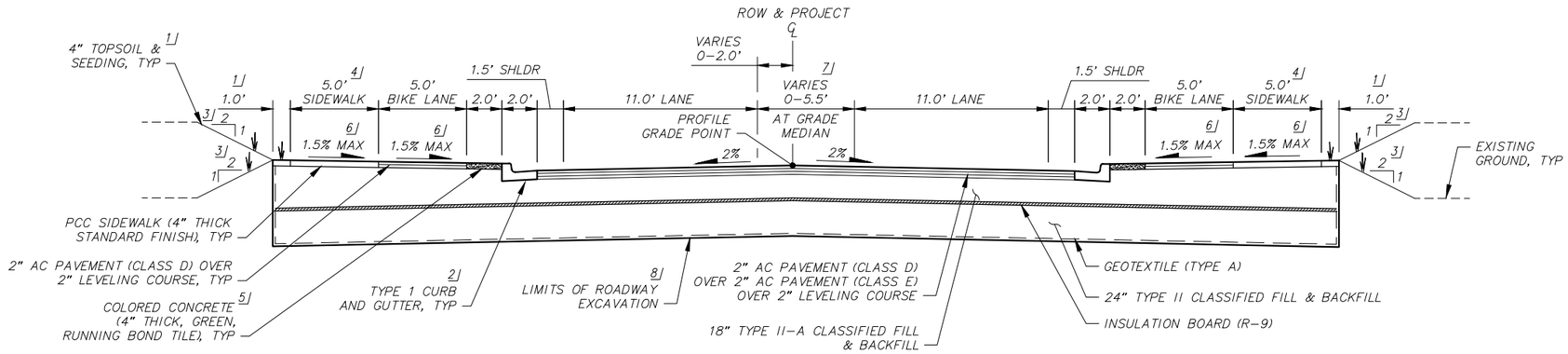


## TYPICAL SECTION "C" - W. 32ND AVENUE WEST OF C STREET INTERSECTION

1

SEE NOTES 1 AND 2

**SHEET NOTES:**

1. SEE SHEET C3 FOR TYPICAL SECTION SUMMARY TABLE. THE STATION RANGES ARE APPROXIMATE AND MAY BE MODIFIED IN THE FIELD BY THE ENGINEER.
2. SEE SHEET C3 FOR TYPICAL LOCATIONS OF STORM DRAIN AND BOTTOM OF SUBGRADE SLOPE.

**#/ FOOT NOTES:**

1. PLACE 4" OF TOPSOIL AND SEEDING (SCHEDULE A) ON ALL DISTURBED AREAS, SEE LANDSCAPING SHEETS FOR DETAILS.
2. TOP AC PAVEMENT SHALL BE 1/8" – 1/4" ABOVE LIP OF CURB, UNLESS OTHERWISE NOTED. SEE DETAIL 3, SHEET C8. INSTALL STEEL CURB FACING ON TYPE 1 CURB AND GUTTER TRANSITIONS PER DETAIL 2, SHEET D5.
3. THE MAXIMUM (STEEPEST) AND TYPICAL CUT/FILL SLOPES ARE 2 (HORIZONTAL) : 1 (VERTICAL). FILL SLOPES MAY VARY ALONG ROADWAY TO PROVIDE POSITIVE DRAINAGE TOWARD ROADWAY. SEE DETAIL 2, SHEET C8. SEE ROADWAY SHEETS FOR LOCATIONS. THE ENGINEER MAY ADJUST THE TYPICAL SLOPES IN THE FIELD.
4. INCREASE SIDEWALK THICKNESS TO 6" ACROSS ALL DRIVEWAYS & ADD WELDED STEEL WIRE REINFORCEMENT PER THE SPECIFICATIONS.
5. INCREASE BUFFER THICKNESS TO 6" ACROSS ALL DRIVEWAYS AND PROVIDE PCC SIDEWALK WITH STANDARD FINISH INSTEAD OF COLORED CONCRETE.
6. THE MAXIMUM BIKE LANE/SIDEWALK GRADE IS 2% AT DRIVEWAYS.
7. AT–GRADE MEDIAN WIDTH VARIES, SEE INTERSECTION LAYOUT SHEETS FOR CURB LAYOUT AND SIGNING AND STRIPING SHEETS FOR STRIPING LAYOUT.
8. PRIOR TO PLACEMENT OF FILL, NATIVE MATERIAL SHALL BE SCARIFIED, PROOF–ROLLED AND COMPACTED AS DIRECTED BY ENGINEER. THIS WORK SHALL BE INCIDENTAL TO THE CONTRACT AND NO SEPARATE PAYMENT SHALL BE MADE.
9. INSTALL AT–GRADE CONCRETE MEDIAN AT BEGINNING OF MEDIAN PER INTERSECTION LAYOUT SHEET.

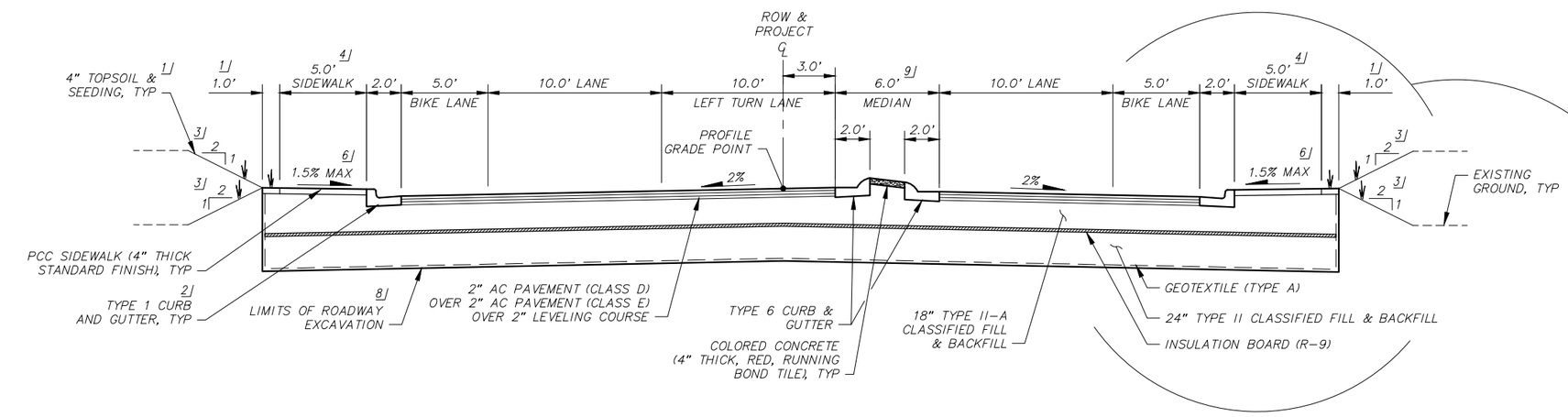


## TYPICAL SECTION "D" - W. 32ND AVENUE EAST OF C STREET INTERSECTION

2

SEE NOTES 1 AND 2

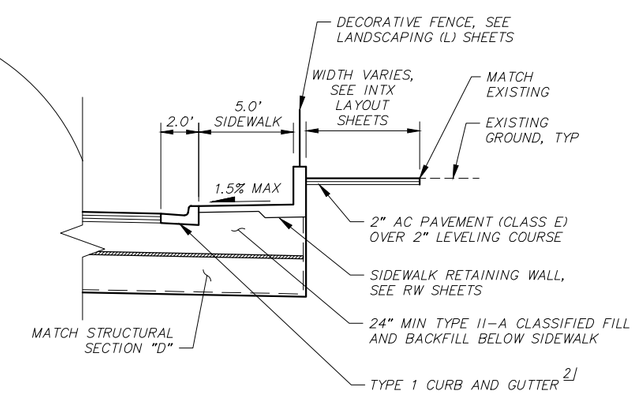


## TYPICAL SECTION "D1" W. 32ND AVENUE EAST OF C STREET INTERSECTION

3

SEE NOTES 1 AND 2

**RECORD DRAWING**

1. DATA PROVIDED BY: _____ TITLE: _____
   THIS WILL SERVE TO CERTIFY THAT THESE RECORD DRAWINGS ARE A TRUE AND ACCURATE REPRESENTATION OF THE PROJECT AS CONSTRUCTED.
   CONTRACTOR: _____
   BY: _____ TITLE: _____ DATE: _____
2. DATA TRANSFERRED BY: _____ TITLE: _____
   COMPANY: _____ DATE: _____
3. BASED ON PERIODIC FIELD OBSERVATIONS BY THE ENGINEER (OR AN INDIVIDUAL UNDER HIS/HER DIRECT SUPERVISION), THE CONTRACTOR–PROVIDED DATA APPEARS TO REPRESENT THE PROJECT AS CONSTRUCTED.
   DATA TRANSFER CHECKED BY: _____ TITLE: _____
   COMPANY: _____ DATE: _____
   BY: _____

| DATA | DRAWN BY | CHECKED BY |
|---|---|---|
| BASE | TS | MJ |
| TOPOGRAPHY | BW | BW |
| PROFILE | AA | JK |
| STORM SEWER | MV | JH |
| WATER/SANITARY SEWER | CB | JK |
| GAS | CB | JK |
| TELEPHONE | CB | JK |
| ELECTRIC | JH | TK |
| DESIGN | AA | JK |
| QUANTITIES | AA | JK |
| PRELIMINARY/FINAL | AA | JK |
| MUNICIPAL/STATE | AA | JK |

PLAN CHECK

| FIELD BOOKS |
|---|
| DESIGN CRW BOOK No. 149, 169, 195 & 196 |
| STAKING |
| ASBUILT |
| CONTRACTOR |
| INSPECTOR |

CONSTRUCTION RECORD

| BM NO. | LOCATION | ELEV. |
|---|---|---|
| CB 7D | See MOA Benchmark Book, Page D–56 | 94.77 |
| CB 7C | See MOA Benchmark Book, Page D–17 | 106.10 |
| GAAB 86 | See MOA Benchmark Book, Page D–18 | 104.53 |

BASIS OF THIS DATUM GAAB 1972 ADJUST

VERTICAL DATUM

| REV | DATE | DESCRIPTION | BY |
|---|---|---|---|
| | | | |

REVISIONS

CRW ENGINEERING GROUP, LLC
3940 ARCTIC BLVD. SUITE 300
ANCHORAGE, ALASKA 99503
PHONE: (907) 562–3252
#ACL582–AK

CONSULTANT

STATE OF ALASKA 49 TH
Justin T. Keene
CE-11775
REGISTERED PROFESSIONAL ENGINEER

SEAL

MUNICIPALITY OF ANCHORAGE

PROJECT MANAGEMENT AND ENGINEERING DEPARTMENT

16–29 W. 32ND AVENUE & E. 33RD AVENUE UPGRADES ARCTIC BOULEVARD TO OLD SEWARD HIGHWAY SCHED A

TYPICAL SECTIONS

W. 32ND AVENUE

SCALE HOR. N/A VER. N/A | GRID SW1629, SW1630, SW1631 | DATE JAN 2020 | STATUS 65% | SHEET C2 of C8

File:J:\JobsData\10138.00 W 32nd And E 33rd Avenue Upgrade\00 CADD\01 Working Set\01 Civil\01 Design\10138.00 Typical Sections – Phase 2.dwg

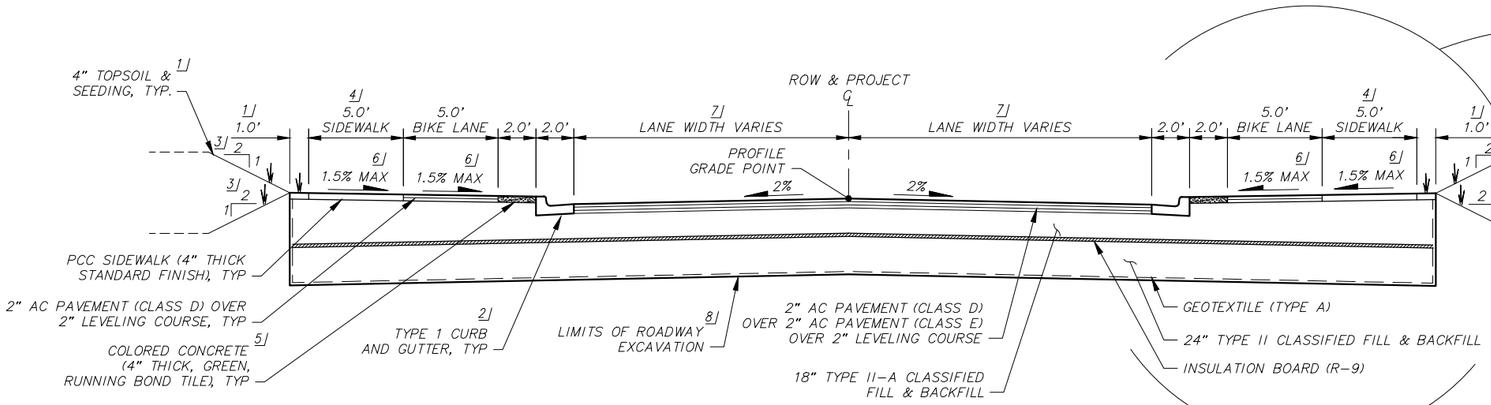


## TYPICAL SECTION "E" - W. 32ND AVENUE TRANSITION SECTION

1

SEE NOTES 1 AND 2

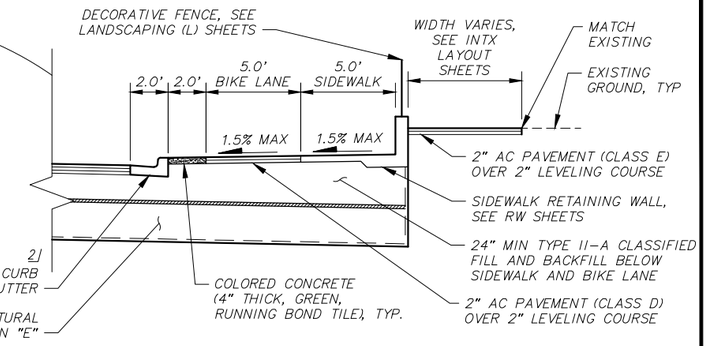


## TYPICAL SECTION "E1" W. 32ND AVENUE TRANSITION SECTION

2

SEE NOTES 1 AND 2

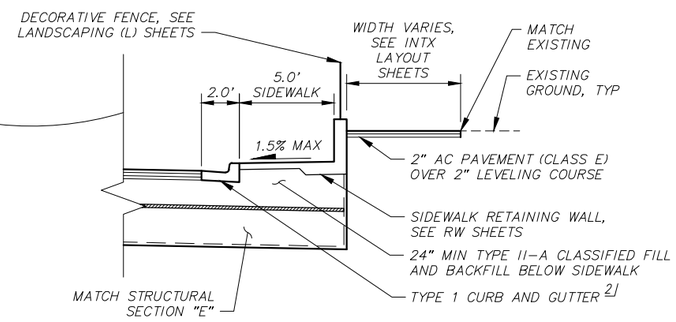


## TYPICAL SECTION "E2" W. 32ND AVENUE TRANSITION SECTION

3

SEE NOTES 1 AND 2

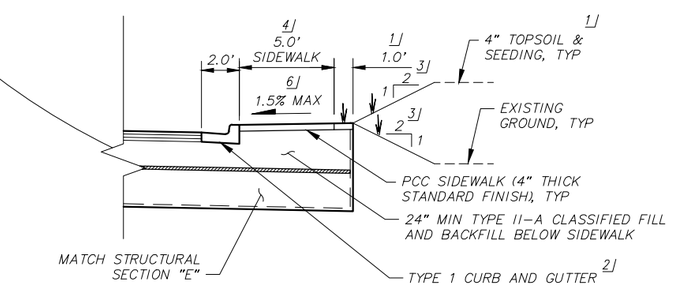


## TYPICAL SECTION "E3" W. 32ND AVENUE TRANSITION SECTION

4

SEE NOTES 1 AND 2

| TYPICAL SECTION TABLE | | | | |
|---|---|---|---|---|
| FROM STA | TO STA | TYPICAL SECTION | | REMARKS |
| | | LEFT | RIGHT | |
| | | | | |
| | | | | |
| | | | | |
| | | | | |
| | | | | |
| | | | | |
| | | | | |
| | | | | |
| | | | | |
| | | | | |
| | | | | |
| | | | | |
| | | | | |
| | | | | |

TO BE COMPLETED FOR 95%

NOTE: STATION RANGES ARE APPROXIMATE AND MAY BE MODIFIED IN THE FIELD BY THE ENGINEER.

***SHEET NOTES:***

1. SEE THIS SHEET FOR TYPICAL SECTION SUMMARY TABLE. THE STATION RANGES ARE APPROXIMATE AND MAY BE MODIFIED IN THE FIELD BY THE ENGINEER.
2. SEE THIS SHEET FOR TYPICAL LOCATIONS OF STORM DRAIN AND BOTTOM OF SUBGRADE SLOPE.

***#/ FOOT NOTES:***

1. PLACE 4" OF TOPSOIL AND SEEDING (SCHEDULE A) ON ALL DISTURBED AREAS, SEE LANDSCAPING SHEETS FOR DETAILS.
2. TOP AC PAVEMENT SHALL BE 1/8" – 1/4" ABOVE LIP OF CURB, UNLESS OTHERWISE NOTED. SEE DETAIL 3, SHEET C8. INSTALL STEEL CURB FACING ON TYPE 1 CURB AND GUTTER TRANSITIONS PER DETAIL 2, SHEET D5.
3. THE MAXIMUM (STEEPEST) AND TYPICAL CUT/FILL SLOPES ARE 2 (HORIZONTAL) : 1 (VERTICAL). FILL SLOPES MAY VARY ALONG ROADWAY TO PROVIDE POSITIVE DRAINAGE TOWARD ROADWAY. SEE DETAIL 2, SHEET C8. SEE ROADWAY SHEETS FOR LOCATIONS. THE ENGINEER MAY ADJUST THE TYPICAL SLOPES IN THE FIELD.
4. INCREASE SIDEWALK THICKNESS TO 6" ACROSS ALL DRIVEWAYS & ADD WELDED STEEL WIRE REINFORCEMENT PER THE SPECIFICATIONS.
5. INCREASE BUFFER THICKNESS TO 6" ACROSS ALL DRIVEWAYS AND PROVIDE PCC SIDEWALK WITH STANDARD FINISH INSTEAD OF COLORED CONCRETE.
6. THE MAXIMUM BIKE LANE/SIDEWALK GRADE IS 2% AT DRIVEWAYS.
7. LANE & SHOULDER WIDTH VARIES FOR TRANSITIONS BETWEEN TYPICAL SECTIONS, SEE INTERSECTION LAYOUT SHEETS FOR CURB LAYOUT AND TRANSITION LOCATIONS.
8. PRIOR TO PLACEMENT OF FILL, NATIVE MATERIAL SHALL BE SCARIFIED, PROOF-ROLLED AND COMPACTED AS DIRECTED BY ENGINEER. THIS WORK SHALL BE INCIDENTAL TO THE CONTRACT AND NO SEPARATE PAYMENT SHALL BE MADE.

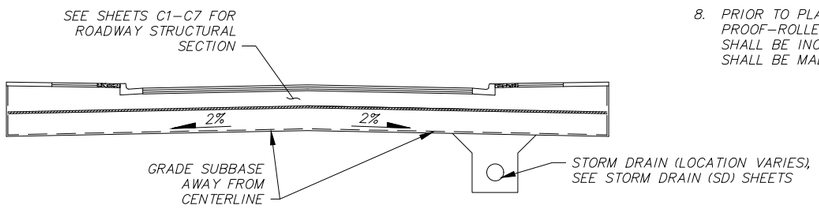


## TYPICAL STORM DRAIN LOCATION AND SUBGRADE SLOPE

5

**RECORD DRAWING**

1. DATA PROVIDED BY: _____ TITLE: _____
   THIS WILL SERVE TO CERTIFY THAT THESE RECORD DRAWINGS ARE A TRUE AND ACCURATE REPRESENTATION OF THE PROJECT AS CONSTRUCTED.
   CONTRACTOR: _____
   BY: _____ TITLE: _____ DATE: _____
2. DATA TRANSFERRED BY: _____ TITLE: _____
   COMPANY: _____ DATE: _____
3. BASED ON PERIODIC FIELD OBSERVATIONS BY THE ENGINEER (OR AN INDIVIDUAL UNDER HIS/HER DIRECT SUPERVISION), THE CONTRACTOR-PROVIDED DATA APPEARS TO REPRESENT THE PROJECT AS CONSTRUCTED.
   DATA TRANSFER CHECKED BY: _____ TITLE: _____
   COMPANY: _____ DATE: _____
   BY: _____

| DATA | DRAWN BY | CHECKED BY |
|---|---|---|
| BASE | TS | MJ |
| TOPOGRAPHY | BW | BW |
| PROFILE | AA | JK |
| STORM SEWER | MV | JH |
| WATER/SANITARY SEWER | CB | JK |
| GAS | CB | JK |
| TELEPHONE | CB | JK |
| ELECTRIC | JH | TK |
| DESIGN | AA | JK |
| QUANTITIES | AA | JK |
| PRELIMINARY/FINAL | AA | JK |
| MUNICIPAL/STATE | AA | JK |

PLAN CHECK

| FIELD BOOKS | BM NO. | LOCATION | ELEV. |
|---|---|---|---|
| DESIGN CRW BOOK No. 149, 169, | CB 7D | See MOA Benchmark Book, Page D-56 | 94.77 |
| 195 & 196 | CB 7C | See MOA Benchmark Book, Page D-17 | 106.10 |
| STAKING | GAAB 86 | See MOA Benchmark Book, Page D-18 | 104.53 |
| ASBUILT | | | |
| CONTRACTOR | BASIS OF THIS DATUM GAAB 1972 ADJUST | | |
| INSPECTOR | | | |

CONSTRUCTION RECORD — VERTICAL DATUM

| REV | DATE | DESCRIPTION | BY |
|---|---|---|---|
| | | | |

REVISIONS

CRW ENGINEERING GROUP, LLC
3940 ARCTIC BLVD. SUITE 300
ANCHORAGE, ALASKA 99503
PHONE: (907) 562-3252
AECL882-AK

CONSULTANT

STATE OF ALASKA 49 TH
Justin T. Keene
CE-11775
REGISTERED PROFESSIONAL ENGINEER

SEAL

MUNICIPALITY OF ANCHORAGE

PROJECT MANAGEMENT AND ENGINEERING DEPARTMENT

16-29 W. 32ND AVENUE & E. 33RD AVENUE UPGRADES ARCTIC BOULEVARD TO OLD SEWARD HIGHWAY SCHED A

TYPICAL SECTIONS

W. 32ND AVENUE

SCALE HOR. N/A VER. N/A | GRID SW1629, SW1630, SW1631 | DATE JAN 2020 | STATUS 65% | SHEET C3 of C8

File:J:\JobsData\10138.00 W 32nd And E 33rd Avenue Upgrade\00 CADD\01 Working Set\01 Civil\01 Design\10138.00 Typical Sections - Phase 2.dwg

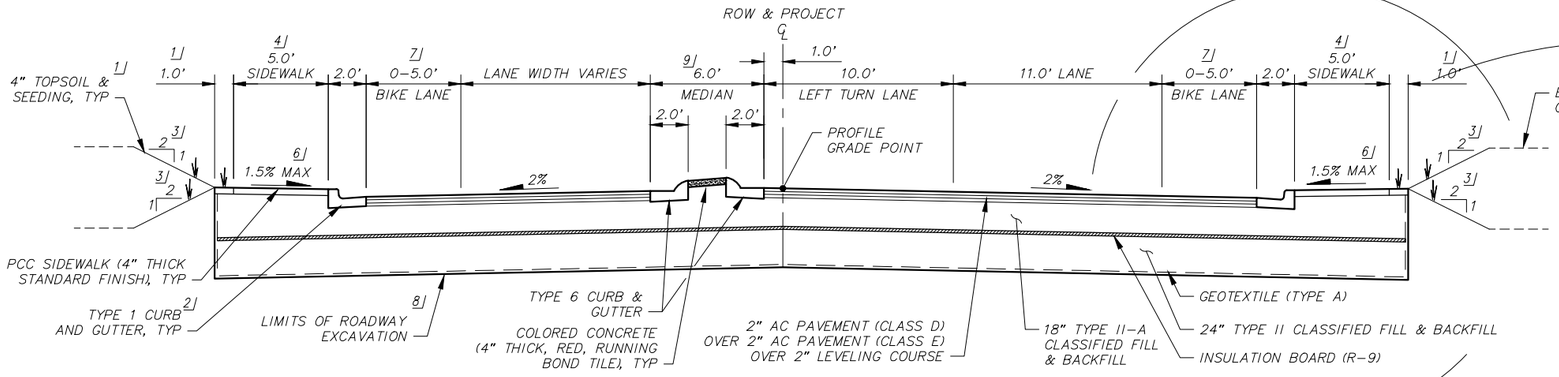


## TYPICAL SECTION "F" - W. 32ND AVENUE/CALAIS DRIVE WEST OF A STREET/DENALI STREET INTERSECTION

1

SEE NOTES 1 AND 2

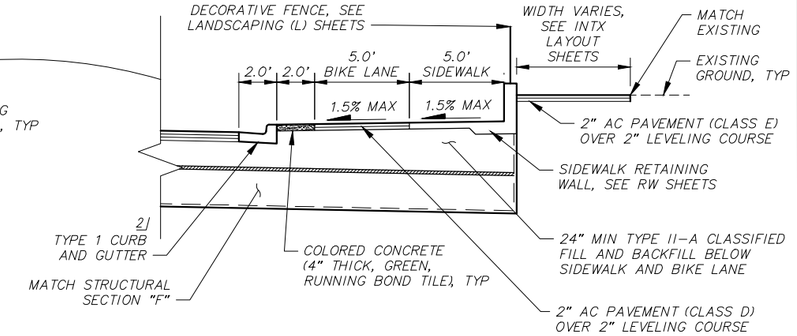


## TYPICAL SECTION "F1" W. 32ND AVE/CALAIS DR WEST OF A ST/DENALI ST INTERSECTION

2

SEE NOTES 1 AND 2

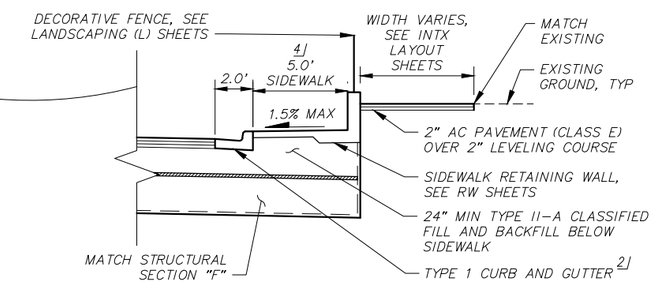


## TYPICAL SECTION "F2" W. 32ND AVE/CALAIS DR WEST OF A ST/DENALI ST INTERSECTION

3

SEE NOTES 1 AND 2

**SHEET NOTES:**

1. SEE SHEET C3 FOR TYPICAL SECTION SUMMARY TABLE. THE STATION RANGES ARE APPROXIMATE AND MAY BE MODIFIED IN THE FIELD BY THE ENGINEER.
2. SEE SHEET C3 FOR TYPICAL LOCATIONS OF STORM DRAIN AND BOTTOM OF SUBGRADE SLOPE.

**#/ FOOT NOTES:**

1. PLACE 4" OF TOPSOIL AND SEEDING (SCHEDULE A) ON ALL DISTURBED AREAS, SEE LANDSCAPING SHEETS FOR DETAILS.
2. TOP AC PAVEMENT SHALL BE 1/8" – 1/4" ABOVE LIP OF CURB, UNLESS OTHERWISE NOTED. SEE DETAIL 3, SHEET C8. INSTALL STEEL CURB FACING ON TYPE 1 CURB AND GUTTER TRANSITIONS PER DETAIL 2, SHEET D5.
3. THE MAXIMUM (STEEPEST) AND TYPICAL CUT/FILL SLOPES ARE 2 (HORIZONTAL) : 1 (VERTICAL). FILL SLOPES MAY VARY ALONG ROADWAY TO PROVIDE POSITIVE DRAINAGE TOWARD ROADWAY. SEE DETAIL 2, SHEET C8. SEE ROADWAY SHEETS FOR LOCATIONS. THE ENGINEER MAY ADJUST THE TYPICAL SLOPES IN THE FIELD.
4. INCREASE SIDEWALK THICKNESS TO 6" ACROSS ALL DRIVEWAYS & ADD WELDED STEEL WIRE REINFORCEMENT PER THE SPECIFICATIONS.
5. INCREASE BUFFER THICKNESS TO 6" ACROSS ALL DRIVEWAYS AND PROVIDE PCC SIDEWALK WITH STANDARD FINISH INSTEAD OF COLORED CONCRETE.
6. THE MAXIMUM BIKE LANE/SIDEWALK GRADE IS 2% AT DRIVEWAYS.
7. WIDTH VARIES, SEE INTERSECTION LAYOUT SHEETS FOR CURB LAYOUT AND SIGNING AND STRIPING SHEETS FOR STRIPING LAYOUT.
8. PRIOR TO PLACEMENT OF FILL, NATIVE MATERIAL SHALL BE SCARIFIED, PROOF-ROLLED AND COMPACTED AS DIRECTED BY ENGINEER. THIS WORK SHALL BE INCIDENTAL TO THE CONTRACT AND NO SEPARATE PAYMENT SHALL BE MADE.
9. INSTALL AT-GRADE CONCRETE MEDIAN AT BEGINNING OF MEDIAN PER INTERSECTION LAYOUT SHEET.

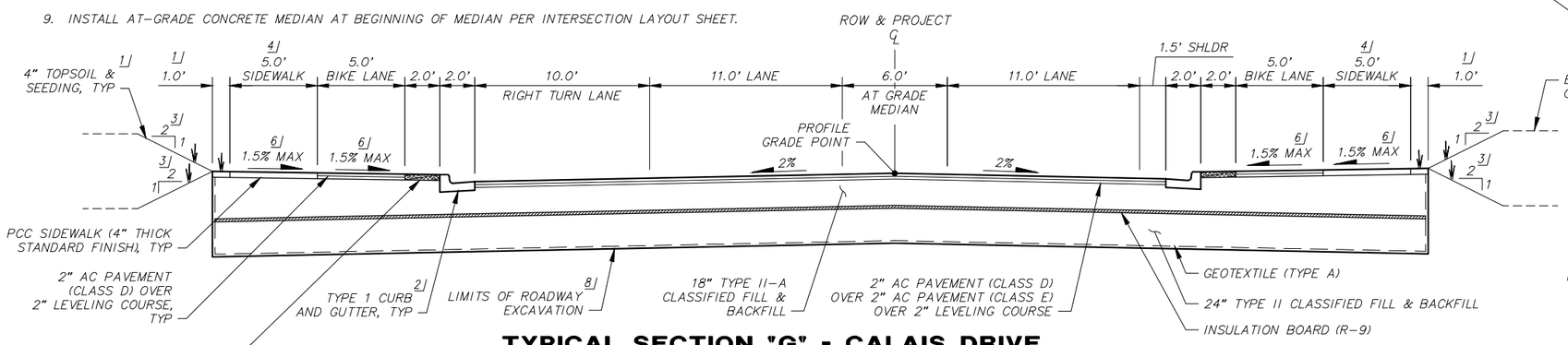


## TYPICAL SECTION "G" - CALAIS DRIVE EAST OF A STREET INTERSECTION

4

SEE NOTES 1 AND 2

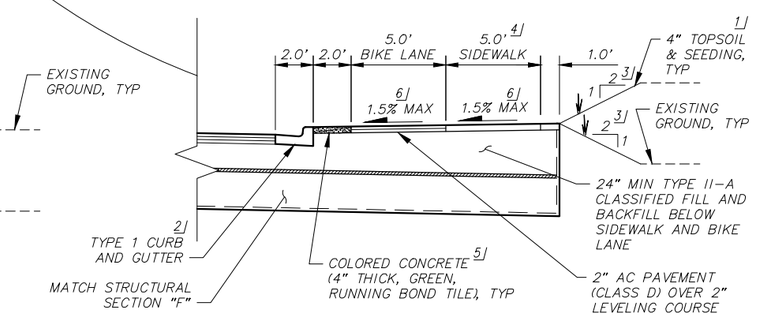


## TYPICAL SECTION "F2" W. 32ND AVE/CALAIS DR WEST OF A ST/DENALI ST INTERSECTION

4

SEE NOTES 1 AND 2

**RECORD DRAWING**

1. DATA PROVIDED BY: _____ TITLE: _____
   THIS WILL SERVE TO CERTIFY THAT THESE RECORD DRAWINGS ARE A TRUE AND ACCURATE REPRESENTATION OF THE PROJECT AS CONSTRUCTED.
   CONTRACTOR: _____
   BY: _____ TITLE: _____ DATE: _____
2. DATA TRANSFERRED BY: _____ TITLE: _____
   COMPANY: _____ DATE: _____
3. BASED ON PERIODIC FIELD OBSERVATIONS BY THE ENGINEER (OR AN INDIVIDUAL UNDER HIS/HER DIRECT SUPERVISION), THE CONTRACTOR-PROVIDED DATA APPEARS TO REPRESENT THE PROJECT AS CONSTRUCTED.
   DATA TRANSFER CHECKED BY: _____ TITLE: _____
   COMPANY: _____ DATE: _____
   BY: _____

| DATA | DRAWN BY | CHECKED BY |
|---|---|---|
| BASE | TS | MJ |
| TOPOGRAPHY | BW | BW |
| PROFILE | AA | JK |
| STORM SEWER | MV | JH |
| WATER/SANITARY SEWER | CB | JK |
| GAS | CB | JK |
| TELEPHONE | CB | JK |
| ELECTRIC | JH | TK |
| DESIGN | AA | JK |
| QUANTITIES | AA | JK |
| PRELIMINARY/FINAL | AA | JK |
| MUNICIPAL/STATE | AA | JK |
| PLAN CHECK | | |

| FIELD BOOKS | BM NO. | LOCATION | ELEV. |
|---|---|---|---|
| DESIGN CRW BOOK No. 149, 169, | CB 7D | See MOA Benchmark Book, Page D-56 | 94.77 |
| 195 & 196 | CB 7C | See MOA Benchmark Book, Page D-17 | 106.10 |
| STAKING | GAAB 86 | See MOA Benchmark Book, Page D-18 | 104.53 |
| ASBUILT | | | |
| CONTRACTOR | BASIS OF THIS DATUM GAAB 1972 ADJUST | | |
| INSPECTOR | | | |

CONSTRUCTION RECORD — VERTICAL DATUM

| REV | DATE | DESCRIPTION | BY |
|---|---|---|---|
| | | | |

REVISIONS

CRW ENGINEERING GROUP, LLC
3940 ARCTIC BLVD. SUITE 300
ANCHORAGE, ALASKA 99503
PHONE: (907) 562-3252
#AECL882-AK

CONSULTANT

STATE OF ALASKA 49 TH Justin T. Keene CE-11775 REGISTERED PROFESSIONAL ENGINEER

SEAL

MUNICIPALITY OF ANCHORAGE

PROJECT MANAGEMENT AND ENGINEERING DEPARTMENT

16-29 W. 32ND AVENUE & E. 33RD AVENUE UPGRADES ARCTIC BOULEVARD TO OLD SEWARD HIGHWAY SCHED A

TYPICAL SECTIONS

W. 32ND AVENUE/CALAIS DRIVE

SCALE HOR. N/A VER. N/A | GRID SW1629, SW1630, SW1631 | DATE JAN 2020 | STATUS 65% | SHEET C4 of C8

File: J:\JobsData\10138.00 W 32nd And E 33rd Avenue Upgrade\00 CADD\01 Working Set\01 Civil\01 Design\10138.00 Typical Sections - Phase 2.dwg

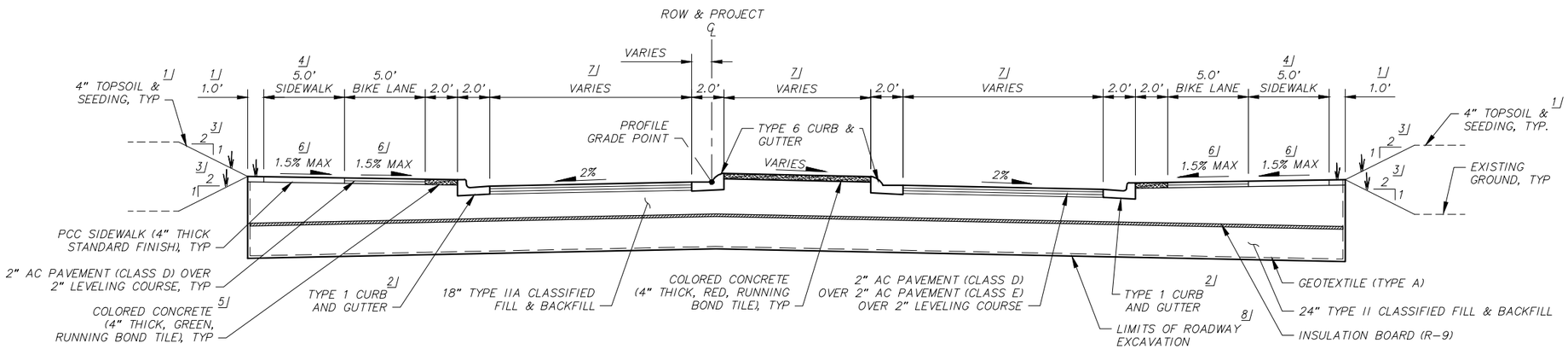


## TYPICAL SECTION "H" - CALAIS DRIVE ROUNDABOUT ENTRANCE/EXIT

1

SEE NOTES 1 AND 2

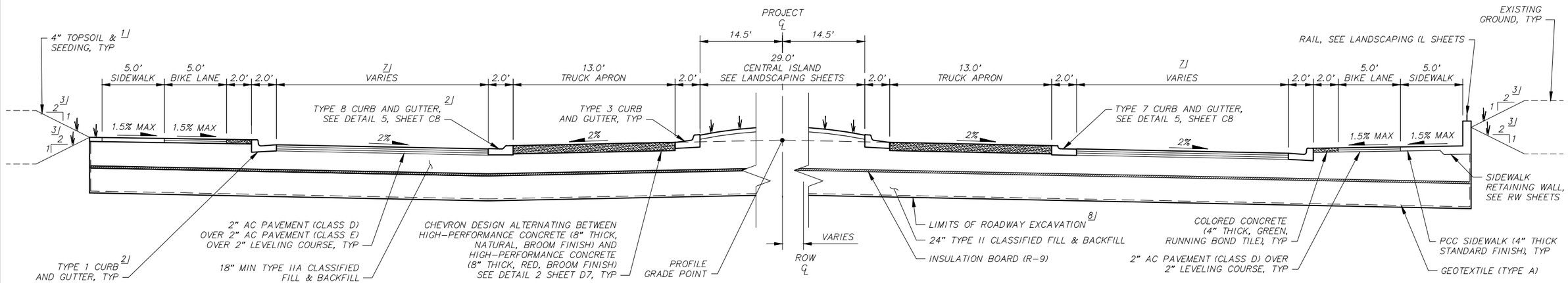


## TYPICAL SECTION "I" - CALAIS DRIVE ROUNDABOUT

2

SEE NOTES 1 AND 2

***SHEET NOTES:***

1. SEE SHEET C3 FOR TYPICAL SECTION SUMMARY TABLE. THE STATION RANGES ARE APPROXIMATE AND MAY BE MODIFIED IN THE FIELD BY THE ENGINEER.
2. SEE SHEET C3 FOR TYPICAL LOCATIONS OF STORM DRAIN AND BOTTOM OF SUBGRADE SLOPE.

***#/ FOOT NOTES:***

1. PLACE 4" OF TOPSOIL AND SEEDING (SCHEDULE A) ON ALL DISTURBED AREAS, SEE LANDSCAPING SHEETS FOR DETAILS.
2. TOP AC PAVEMENT SHALL BE 1/8" – 1/4" ABOVE LIP OF CURB, UNLESS OTHERWISE NOTED. SEE DETAIL 3, SHEET C8. INSTALL STEEL CURB FACING ON TYPE 1 CURB AND GUTTER TRANSITIONS PER DETAIL 2, SHEET D5.
3. THE MAXIMUM (STEEPEST) AND TYPICAL CUT/FILL SLOPES ARE 2 (HORIZONTAL) : 1 (VERTICAL). FILL SLOPES MAY VARY ALONG ROADWAY TO PROVIDE POSITIVE DRAINAGE TOWARD ROADWAY. SEE DETAIL 2, SHEET C8. SEE ROADWAY SHEETS FOR LOCATIONS. THE ENGINEER MAY ADJUST THE TYPICAL SLOPES IN THE FIELD.
4. INCREASE SIDEWALK THICKNESS TO 6" ACROSS ALL DRIVEWAYS & ADD WELDED STEEL WIRE REINFORCEMENT PER THE SPECIFICATIONS.
5. INCREASE BUFFER THICKNESS TO 6" ACROSS ALL DRIVEWAYS AND PROVIDE PCC SIDEWALK WITH STANDARD FINISH INSTEAD OF COLORED CONCRETE.
6. THE MAXIMUM BIKE LANE/SIDEWALK GRADE IS 2% AT DRIVEWAYS.
7. WIDTH VARIES, SEE INTERSECTION LAYOUT SHEETS FOR LANE AND MEDIAN WIDTHS.
8. PRIOR TO PLACEMENT OF FILL, NATIVE MATERIAL SHALL BE SCARIFIED, PROOF-ROLLED AND COMPACTED AS DIRECTED BY ENGINEER. THIS WORK SHALL BE INCIDENTAL TO THE CONTRACT AND NO SEPARATE PAYMENT SHALL BE MADE.

**RECORD DRAWING**

1. DATA PROVIDED BY: _____ TITLE: _____
THIS WILL SERVE TO CERTIFY THAT THESE RECORD DRAWINGS ARE A TRUE AND ACCURATE REPRESENTATION OF THE PROJECT AS CONSTRUCTED.
CONTRACTOR: _____
BY: _____ TITLE: _____ DATE: _____
2. DATA TRANSFERRED BY: _____ TITLE: _____
COMPANY: _____ DATE: _____
3. BASED ON PERIODIC FIELD OBSERVATIONS BY THE ENGINEER (OR AN INDIVIDUAL UNDER HIS/HER DIRECT SUPERVISION), THE CONTRACTOR-PROVIDED DATA APPEARS TO REPRESENT THE PROJECT AS CONSTRUCTED.
DATA TRANSFER CHECKED BY: _____ TITLE: _____
COMPANY: _____ DATE: _____
BY: _____

| DATA | DRAWN BY | CHECKED BY |
|---|---|---|
| BASE | TS | MJ |
| TOPOGRAPHY | BW | BW |
| PROFILE | AA | JK |
| STORM SEWER | MV | JH |
| WATER/SANITARY SEWER | CB | JK |
| GAS | CB | JK |
| TELEPHONE | CB | JK |
| ELECTRIC | JH | TK |
| DESIGN | AA | JK |
| QUANTITIES | AA | JK |
| PRELIMINARY/FINAL | AA | JK |
| MUNICIPAL/STATE | AA | JK |
| PLAN CHECK | | |

| FIELD BOOKS | BM NO. | LOCATION | ELEV. |
|---|---|---|---|
| DESIGN CRW BOOK No. 149, 169, | CB 7D | See MOA Benchmark Book, Page D-56 | 94.77 |
| 195 & 196 | CB 7C | See MOA Benchmark Book, Page D-17 | 106.10 |
| STAKING | GAAB 86 | See MOA Benchmark Book, Page D-18 | 104.53 |
| ASBUILT | | | |
| CONTRACTOR | BASIS OF THIS DATUM GAAB 1972 ADJUST | | |
| INSPECTOR | | | |
| CONSTRUCTION RECORD | VERTICAL DATUM | | |

| REV | DATE | DESCRIPTION | BY |
|---|---|---|---|
| | | | |
| | | | |
| | | | |
| | | | |
| | | | |
| | | | |
| | | | |
| | | | |
| | | | |
| | | | |
| REVISIONS | | | |

CRW ENGINEERING GROUP, LLC
3940 ARCTIC BLVD. SUITE 300
ANCHORAGE, ALASKA 99503
PHONE: (907) 562-3252
#ECL882-AK
CONSULTANT

STATE OF ALASKA 49 TH Justin T. Keene CE-11775 REGISTERED PROFESSIONAL ENGINEER
SEAL

MUNICIPALITY OF ANCHORAGE

PROJECT MANAGEMENT AND ENGINEERING DEPARTMENT

16-29 W. 32ND AVENUE & E. 33RD AVENUE UPGRADES ARCTIC BOULEVARD TO OLD SEWARD HIGHWAY SCHED A

TYPICAL SECTIONS

CALAIS DRIVE ROUNDABOUT

SCALE HOR. N/A VER. N/A | GRID SW1629, SW1630, SW1631 | DATE JAN 2020 | STATUS 65% | SHEET C5 of C8

File:J:\JobsData\10138.00 W 32nd And E 33rd Avenue Upgrade\00 CADD\01 Working Set\01 Civil\01 Design\10138.00 Typical Sections - Phase 2.dwg

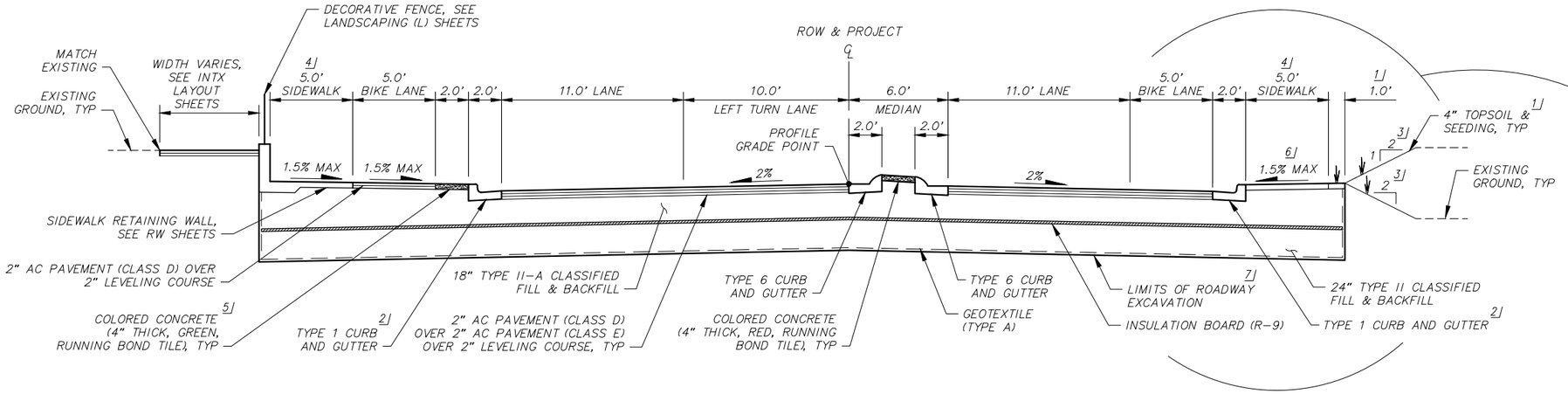


## TYPICAL SECTION "J" - E. 33RD AVENUE EAST OF DENALI STREET INTERSECTION

1

SEE NOTES 1 AND 2

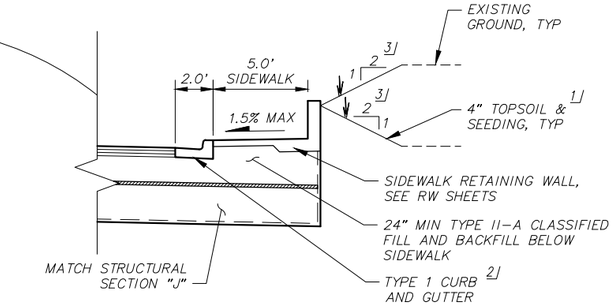


## TYPICAL SECTION "J1" E. 33RD AVENUE EAST OF DENALI STREET INTERSECTION

2

SEE NOTES 1 AND 2

**#/ FOOT NOTES:**

1. PLACE 4" OF TOPSOIL AND SEEDING (SCHEDULE A) ON ALL DISTURBED AREAS, SEE LANDSCAPING SHEETS FOR DETAILS.
2. TOP AC PAVEMENT SHALL BE 1/8" – 1/4" ABOVE LIP OF CURB, UNLESS OTHERWISE NOTED. SEE DETAIL 3, SHEET C8. INSTALL STEEL CURB FACING ON TYPE 1 CURB AND GUTTER TRANSITIONS PER DETAIL 2, SHEET D5.
3. THE MAXIMUM (STEEPEST) AND TYPICAL CUT/FILL SLOPES ARE 2 (HORIZONTAL) : 1 (VERTICAL). FILL SLOPES MAY VARY ALONG ROADWAY TO PROVIDE POSITIVE DRAINAGE TOWARD ROADWAY. SEE DETAIL 2, SHEET C8. SEE ROADWAY SHEETS FOR LOCATIONS. THE ENGINEER MAY ADJUST THE TYPICAL SLOPES IN THE FIELD.
4. INCREASE SIDEWALK THICKNESS TO 6" ACROSS ALL DRIVEWAYS & ADD WELDED STEEL WIRE REINFORCEMENT PER THE SPECIFICATIONS.
5. INCREASE BUFFER THICKNESS TO 6" ACROSS ALL DRIVEWAYS AND PROVIDE PCC SIDEWALK WITH STANDARD FINISH INSTEAD OF COLORED CONCRETE.
6. THE MAXIMUM BIKE LANE/SIDEWALK GRADE IS 2% AT DRIVEWAYS.
7. PRIOR TO PLACEMENT OF FILL, NATIVE MATERIAL SHALL BE SCARIFIED, PROOF-ROLLED AND COMPACTED AS DIRECTED BY ENGINEER. THIS WORK SHALL BE INCIDENTAL TO THE CONTRACT AND NO SEPARATE PAYMENT SHALL BE MADE.

**SHEET NOTES:**

1. SEE SHEET C3 FOR TYPICAL SECTION SUMMARY TABLE. THE STATION RANGES ARE APPROXIMATE AND MAY BE MODIFIED IN THE FIELD BY THE ENGINEER.
2. SEE SHEET C3 FOR TYPICAL LOCATIONS OF STORM DRAIN AND BOTTOM OF SUBGRADE SLOPE.

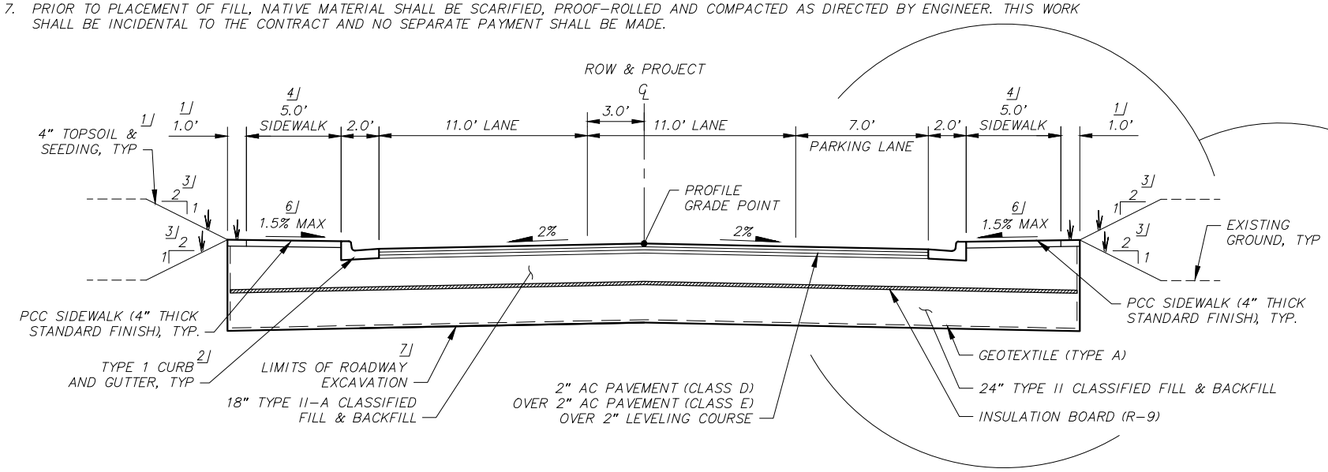


## TYPICAL SECTION "K" - EAST 33RD AVENUE PARKING LANE

3

SEE NOTES 1 AND 2

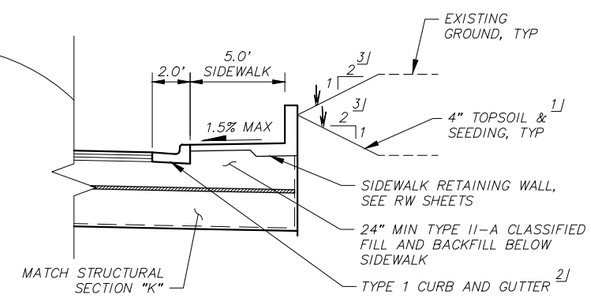


## TYPICAL SECTION "K1" - EAST 33RD AVENUE PARKING LANE

4

SEE NOTES 1 AND 2

**RECORD DRAWING**

1. DATA PROVIDED BY: _____ TITLE: _____
   THIS WILL SERVE TO CERTIFY THAT THESE RECORD DRAWINGS ARE A TRUE AND ACCURATE REPRESENTATION OF THE PROJECT AS CONSTRUCTED.
   CONTRACTOR: _____
   BY: _____ TITLE: _____ DATE: _____
2. DATA TRANSFERRED BY: _____ TITLE: _____
   COMPANY: _____ DATE: _____
3. BASED ON PERIODIC FIELD OBSERVATIONS BY THE ENGINEER (OR AN INDIVIDUAL UNDER HIS/HER DIRECT SUPERVISION), THE CONTRACTOR-PROVIDED DATA APPEARS TO REPRESENT THE PROJECT AS CONSTRUCTED.
   DATA TRANSFER CHECKED BY: _____ TITLE: _____
   COMPANY: _____ DATE: _____
   BY: _____

| DATA | DRAWN BY | CHECKED BY |
|---|---|---|
| BASE | TS | MJ |
| TOPOGRAPHY | BW | BW |
| PROFILE | AA | JK |
| STORM SEWER | MV | JH |
| WATER/SANITARY SEWER | CB | JK |
| GAS | CB | JK |
| TELEPHONE | CB | JK |
| ELECTRIC | JH | TK |
| DESIGN | AA | JK |
| QUANTITIES | AA | JK |
| PRELIMINARY/FINAL | AA | JK |
| MUNICIPAL/STATE | AA | JK |
| PLAN CHECK | | |

| FIELD BOOKS | BM NO. | LOCATION | ELEV. |
|---|---|---|---|
| DESIGN CRW BOOK No. 149, 169, | CB 7D | See MOA Benchmark Book, Page D-56 | 94.77 |
| 195 & 196 | CB 7C | See MOA Benchmark Book, Page D-17 | 106.10 |
| STAKING | GAAB 86 | See MOA Benchmark Book, Page D-18 | 104.53 |
| | | | |
| | | | |
| ASBUILT | | | |
| CONTRACTOR | BASIS OF THIS DATUM GAAB 1972 ADJUST | | |
| INSPECTOR | | | |
| CONSTRUCTION RECORD | VERTICAL DATUM | | |

| REV | DATE | DESCRIPTION | BY |
|---|---|---|---|
| | | | |
| | | | |
| | | | |
| | | | |
| | | | |
| | | | |
| | | | |
| | | | |
| | | | |
| | | | |
| REVISIONS | | | |

CRW ENGINEERING GROUP, LLC
3940 ARCTIC BLVD. SUITE 300
ANCHORAGE, ALASKA 99503
PHONE: (907) 562-3252
#AECL882-AK
CONSULTANT

STATE OF ALASKA 49TH Justin T. Keene CE-11775 REGISTERED PROFESSIONAL ENGINEER
SEAL

MUNICIPALITY OF ANCHORAGE

PROJECT MANAGEMENT AND ENGINEERING DEPARTMENT

16-29 W. 32ND AVENUE & E. 33RD AVENUE UPGRADES ARCTIC BOULEVARD TO OLD SEWARD HIGHWAY SCHED A

TYPICAL SECTIONS

E. 33RD AVENUE

SCALE HOR. N/A VER. N/A | GRID SW1629, SW1630, SW1631 | DATE JAN 2020 | STATUS 65% | SHEET C6 of C8

File:J:\Jobdata\10138.00 W 32nd And E 33rd Avenue Upgrade\00 CADD\01 Working Set\01 Civil\01 Design\10138.00 Typical Sections - Phase 2.dwg

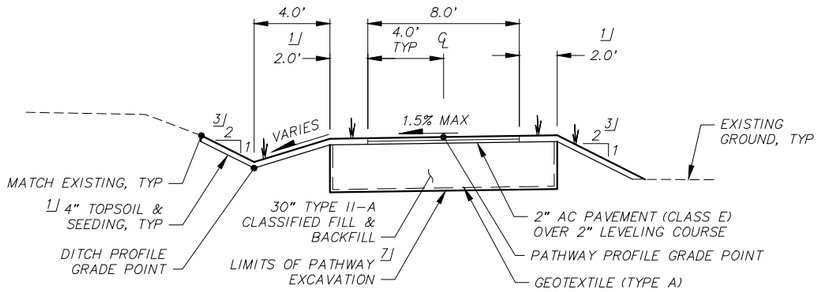


## TYPICAL SECTION "L" PATHWAY WITH DITCH

1

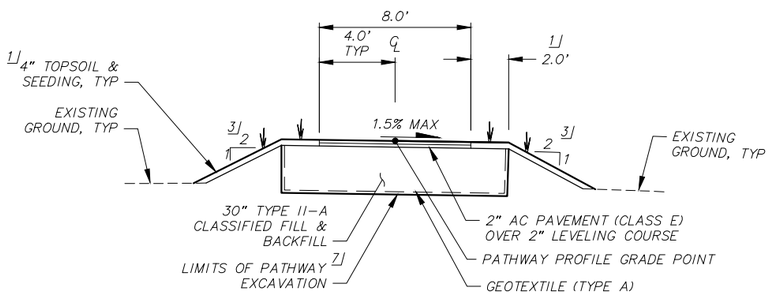


## TYPICAL SECTION "M" PATHWAY WITHOUT DITCHES

2

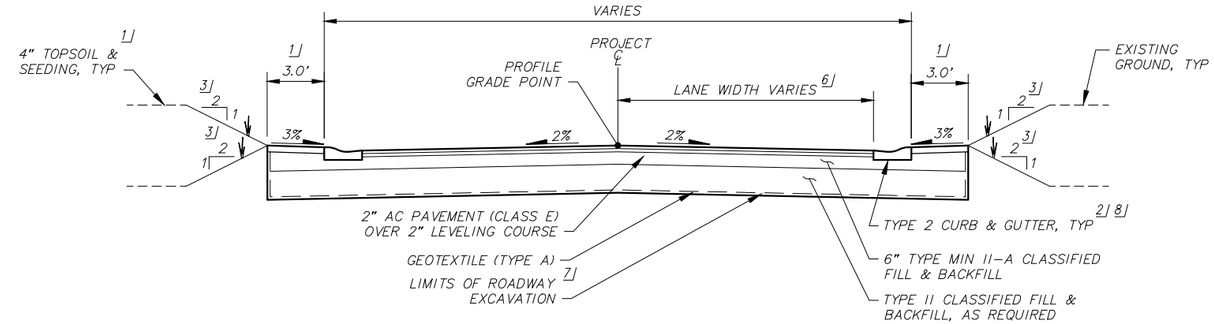


## TYPICAL SECTION "N" SIDE STREETS WITH CURB (BEYOND CURB RETURN)

3

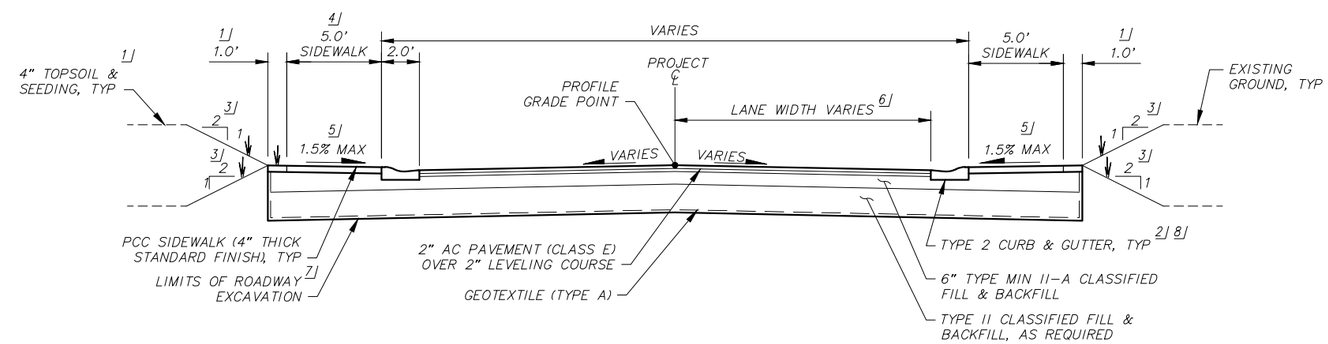


## TYPICAL SECTION "O" SIDE STREETS WITH SIDEWALK (BEYOND CURB RETURN)

4

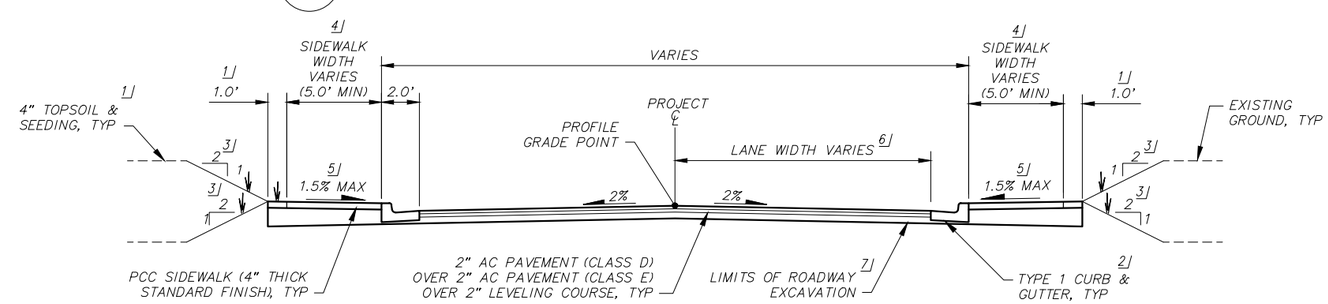


## TYPICAL SECTION "P" SIDE STREETS AT SIGNALIZED INTERSECTIONS

5

**#/ FOOT NOTES:**

1. PLACE 4" OF TOPSOIL AND SEEDING (SCHEDULE A) ON ALL DISTURBED AREAS, SEE LANDSCAPING SHEETS FOR DETAILS.
2. TOP AC PAVEMENT SHALL BE 1/8" – 1/4" ABOVE LIP OF CURB, UNLESS OTHERWISE NOTED.
3. THE MAXIMUM (STEEPEST) AND TYPICAL CUT/FILL SLOPES ARE 2 (HORIZONTAL) : 1 (VERTICAL). FILL SLOPES MAY VARY ALONG ROADWAY TO PROVIDE POSITIVE DRAINAGE TOWARD ROADWAY. SEE DETAIL 2, SHEET C8. SEE ROADWAY SHEETS FOR LOCATIONS. THE ENGINEER MAY ADJUST THE TYPICAL SLOPES IN THE FIELD.
4. INCREASE SIDEWALK THICKNESS TO 6" ACROSS ALL DRIVEWAYS & ADD WELDED STEEL WIRE REINFORCEMENT PER THE SPECIFICATIONS.
5. THE MAXIMUM SIDEWALK GRADE IS 2% AT DRIVEWAYS.
6. WIDTH VARIES, SEE INTERSECTION LAYOUT SHEETS FOR LANE WIDTHS.
7. PRIOR TO PLACEMENT OF FILL, NATIVE MATERIAL SHALL BE SCARIFIED, PROOF-ROLLED AND COMPACTED AS DIRECTED BY ENGINEER. THIS WORK SHALL BE INCIDENTAL TO THE CONTRACT AND NO SEPARATE PAYMENT SHALL BE MADE.
8. INSTALL TYPE 2 CURB & GUTTER UNLESS OTHERWISE NOTED, SEE INTERSECTION LAYOUT SHEETS FOR CURB TYPES ON SIDE STREETS.

**RECORD DRAWING**

1. DATA PROVIDED BY: _____ TITLE: _____
THIS WILL SERVE TO CERTIFY THAT THESE RECORD DRAWINGS ARE A TRUE AND ACCURATE REPRESENTATION OF THE PROJECT AS CONSTRUCTED.
CONTRACTOR: _____
BY: _____ TITLE: _____ DATE: _____
2. DATA TRANSFERRED BY: _____ TITLE: _____
COMPANY: _____ DATE: _____
3. BASED ON PERIODIC FIELD OBSERVATIONS BY THE ENGINEER (OR AN INDIVIDUAL UNDER HIS/HER DIRECT SUPERVISION), THE CONTRACTOR-PROVIDED DATA APPEARS TO REPRESENT THE PROJECT AS CONSTRUCTED.
DATA TRANSFER CHECKED BY: _____ TITLE: _____
COMPANY: _____ DATE: _____
BY: _____

| DATA | DRAWN BY | CHECKED BY |
|---|---|---|
| BASE | TS | MJ |
| TOPOGRAPHY | BW | BW |
| PROFILE | AA | JK |
| STORM SEWER | MV | JH |
| WATER/SANITARY SEWER | CB | JK |
| GAS | CB | JK |
| TELEPHONE | CB | JK |
| ELECTRIC | JH | TK |
| DESIGN | AA | JK |
| QUANTITIES | AA | JK |
| PRELIMINARY/FINAL | AA | JK |
| MUNICIPAL/STATE | AA | JK |

PLAN CHECK

| FIELD BOOKS | BM NO. | LOCATION | ELEV. |
|---|---|---|---|
| DESIGN CRW BOOK No. 149, 169, | CB 7D | See MOA Benchmark Book, Page D-56 | 94.77 |
| 195 & 196 | CB 7C | See MOA Benchmark Book, Page D-17 | 106.10 |
| STAKING | GAAB 86 | See MOA Benchmark Book, Page D-18 | 104.53 |
| ASBUILT | | | |
| CONTRACTOR | BASIS OF THIS DATUM GAAB 1972 ADJUST | | |
| INSPECTOR | | | |

CONSTRUCTION RECORD

VERTICAL DATUM

| REV | DATE | DESCRIPTION | BY |
|---|---|---|---|
| | | | |

REVISIONS

CRW ENGINEERING GROUP, LLC
3940 ARCTIC BLVD. SUITE 300
ANCHORAGE, ALASKA 99503
PHONE: (907) 562-3252
#AECL882-AK

CONSULTANT

STATE OF ALASKA 49 TH
Justin T. Keene
CE-11775
REGISTERED PROFESSIONAL ENGINEER

SEAL

MUNICIPALITY OF ANCHORAGE

PROJECT MANAGEMENT AND ENGINEERING DEPARTMENT

16-29 W. 32ND AVENUE & E. 33RD AVENUE UPGRADES ARCTIC BOULEVARD TO OLD SEWARD HIGHWAY SCHED A

TYPICAL SECTIONS

PATHWAY & SIDE STREETS

SCALE HOR. N/A VER. N/A

GRID SW1629, SW1630, SW1631

DATE JAN 2020 STATUS 65%

SHEET C7 of C8

File: J:\JobsData\10138.00 W 32nd And E 33rd Avenue Upgrade\00 CADD\01 Working Set\01 Civil\01 Design\10138.00 Typical Sections - Phase 2.dwg

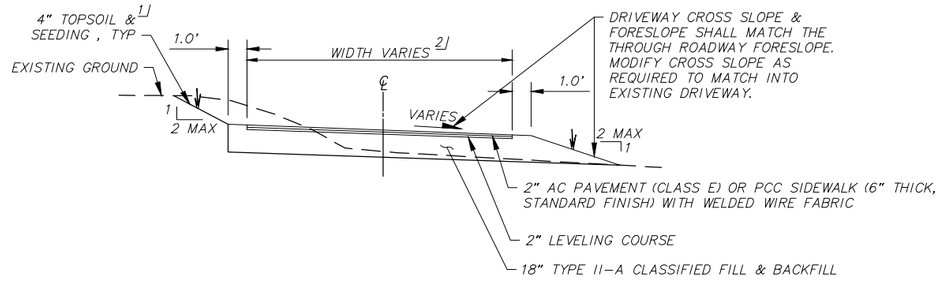


## TYPICAL SECTION "Q" DRIVEWAY 3/ PAVED OR CONCRETE

1

**SHEET NOTES:**

1. SEE SHEETS C1-C7 FOR ADJOINING ROADWAY SECTION.

**#/ FOOT NOTES:**

1. PLACE 4" OF TOPSOIL AND SEEDING PER LANDSCAPING (L) SHEETS ON ALL DISTURBED AREAS.
2. SEE RECONSTRUCT DRIVEWAY SUMMARY TABLE ON THE ROADWAY SUMMARY TABLE (T) SHEETS, DRIVEWAY RECONSTRUCTION PLANS & DRIVEWAY DETAILS FOR DRIVEWAY RECONSTRUCTION INFORMATION.
3. INSTALL INSULATION ADJACENT TO DRIVEWAY AND TRANSITION TO DRIVEWAY SECTION PER DETAIL 4, THIS SHEET

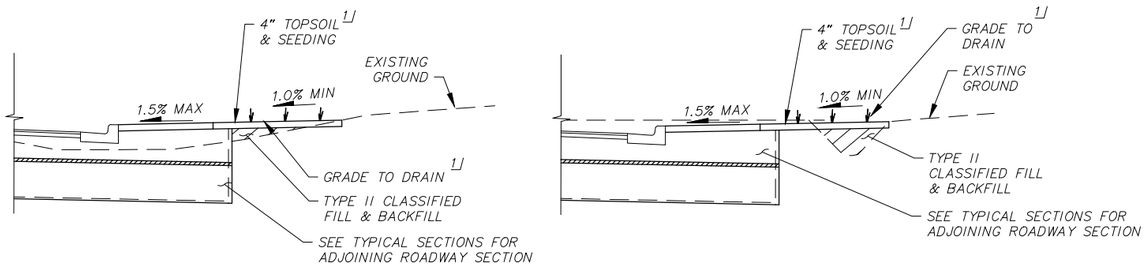


## SPECIAL FILL GRADING DETAILS

2

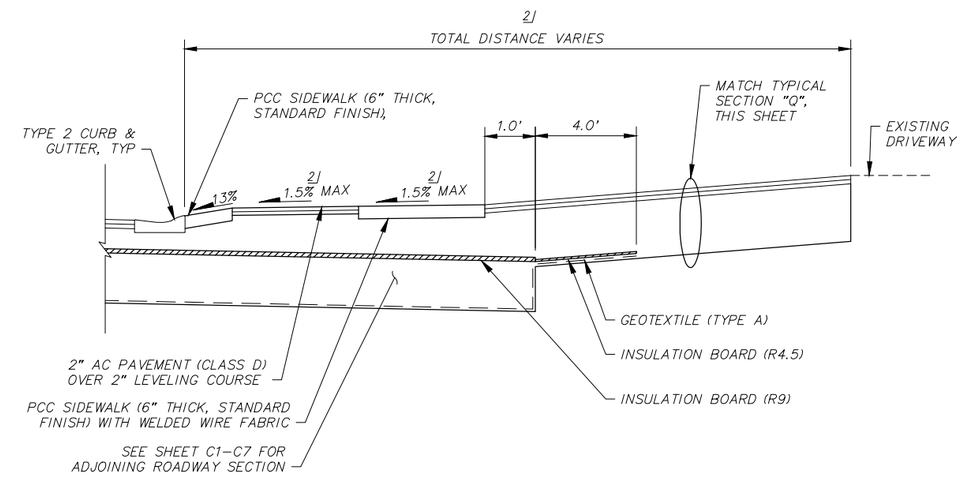


## TYPICAL DRIVEWAY CONNECTION SECTION

4

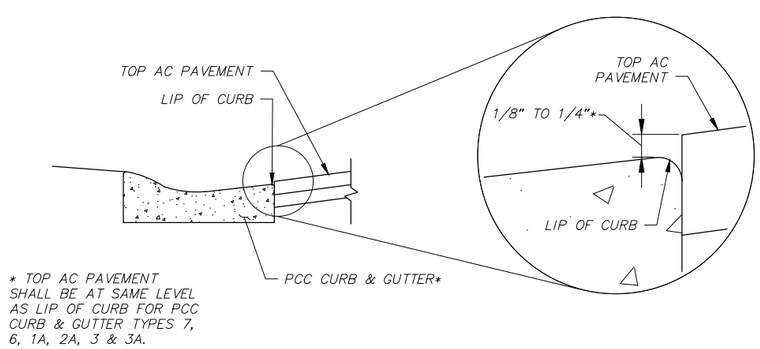


## CURB AND GUTTER & AC PAVEMENT EDGE DETAIL

3

TYPE 7 CURB AND GUTTER

TYPE 8 CURB AND GUTTER

## TRUCK APRON CURB & GUTTER

5

**RECORD DRAWING**

1. DATA PROVIDED BY: _____ TITLE: _____
   THIS WILL SERVE TO CERTIFY THAT THESE RECORD DRAWINGS ARE A TRUE AND ACCURATE REPRESENTATION OF THE PROJECT AS CONSTRUCTED.
   CONTRACTOR: _____
   BY: _____ TITLE: _____ DATE: _____
2. DATA TRANSFERRED BY: _____ TITLE: _____
   COMPANY: _____ DATE: _____
3. BASED ON PERIODIC FIELD OBSERVATIONS BY THE ENGINEER (OR AN INDIVIDUAL UNDER HIS/HER DIRECT SUPERVISION), THE CONTRACTOR-PROVIDED DATA APPEARS TO REPRESENT THE PROJECT AS CONSTRUCTED.
   DATA TRANSFER CHECKED BY: _____ TITLE: _____
   COMPANY: _____ DATE: _____
   BY: _____

| DATA | DRAWN BY | CHECKED BY |
|---|---|---|
| BASE | TS | MJ |
| TOPOGRAPHY | BW | BW |
| PROFILE | AA | JK |
| STORM SEWER | MV | JH |
| WATER/SANITARY SEWER | CB | JK |
| GAS | CB | JK |
| TELEPHONE | CB | JK |
| ELECTRIC | JH | TK |
| DESIGN | AA | JK |
| QUANTITIES | AA | JK |
| PRELIMINARY/FINAL | AA | JK |
| MUNICIPAL/STATE | AA | JK |

PLAN CHECK

| FIELD BOOKS | BM NO. | LOCATION | ELEV. |
|---|---|---|---|
| DESIGN CRW BOOK No. 149, 169, | CB 7D | See MOA Benchmark Book, Page D-56 | 94.77 |
| 195 & 196 | CB 7C | See MOA Benchmark Book, Page D-17 | 106.10 |
| STAKING | GAAB 86 | See MOA Benchmark Book, Page D-18 | 104.53 |
| | | | |
| | | | |
| | | | |
| ASBUILT | | | |
| CONTRACTOR | BASIS OF THIS DATUM GAAB 1972 ADJUST | | |
| INSPECTOR | | | |

CONSTRUCTION RECORD

VERTICAL DATUM

| REV | DATE | DESCRIPTION | BY |
|---|---|---|---|
| | | | |

REVISIONS

CRW ENGINEERING GROUP, LLC
3940 ARCTIC BLVD. SUITE 300
ANCHORAGE, ALASKA 99503
PHONE: (907) 562-3252
#AECL682-AK

CONSULTANT

STATE OF ALASKA 49 TH Justin T. Keene CE-11775 REGISTERED PROFESSIONAL ENGINEER

SEAL

MUNICIPALITY OF ANCHORAGE

PROJECT MANAGEMENT AND ENGINEERING DEPARTMENT

16-29 W. 32ND AVENUE & E. 33RD AVENUE UPGRADES ARCTIC BOULEVARD TO OLD SEWARD HIGHWAY SCHED A

TYPICAL SECTIONS

DRIVEWAYS & DETAILS

SCALE HOR. N/A VER. N/A

GRID SW1629, SW1630, SW1631

DATE JAN 2020 STATUS 65%

SHEET C8 of C8

File:J:\JobsData\10138.00 W 32nd And E 33rd Avenue Upgrade\00 CADD\01 Working Set\01 Civil\01 Design\10138.00 Typical Sections - Phase 2.dwg

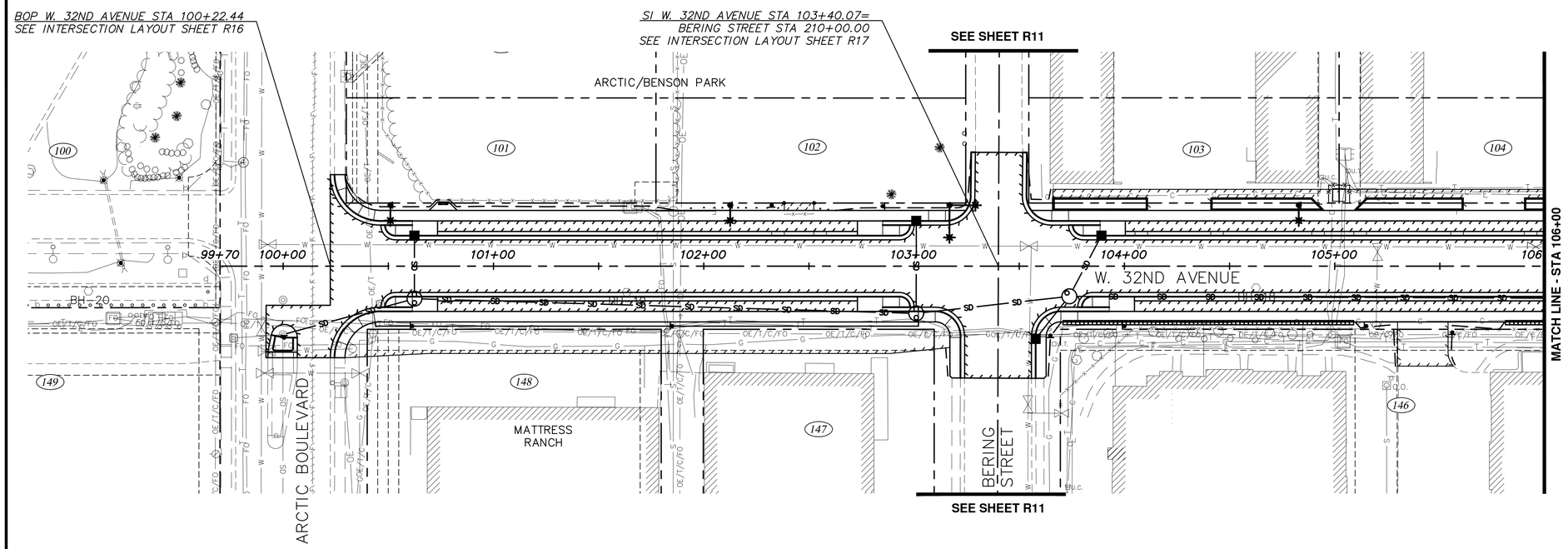


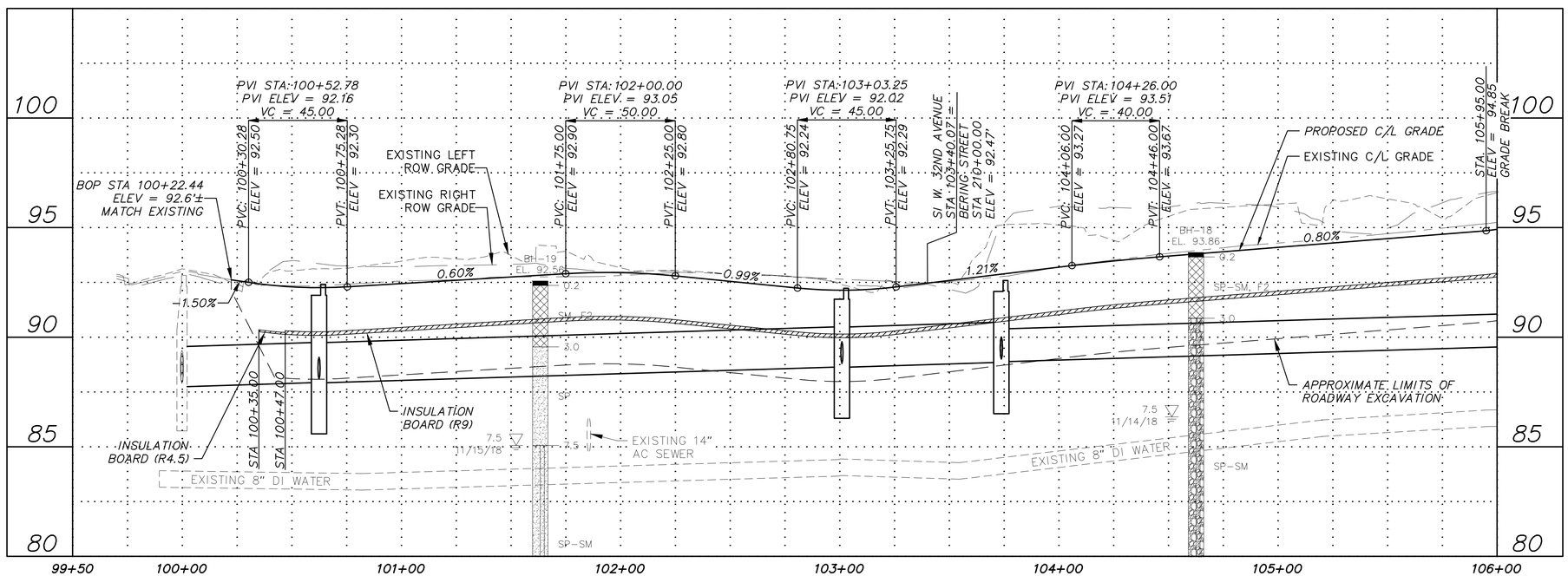


NOTES:

1. SEE ROADWAY SUMMARY TABLE (T) SHEETS FOR DETAILED ROADWAY INFORMATION.
2. SEE ROADWAY DETAIL (D) SHEETS FOR ROADWAY DETAILS.
3. FOR DETAILED SOILS INFORMATION, SEE THE SPECIFICATIONS.
4. SEE STORM DRAIN (SD) SHEETS FOR LOCATIONS AND ELEVATIONS OF STORM DRAIN PIPES & STRUCTURES.
5. SEE SURVEY CONTROL (V) SHEETS FOR PROJECT CENTERLINE ALIGNMENT DATA.
6. SEE ILLUMINATION (I) SHEETS FOR ROADWAY LIGHTING INFORMATION.
7. THE DEMOLITION ITEMS REMOVED AS SHOWN ON THE DEMOLITION (B) SHEETS ARE NOT SHOWN FOR CLARITY.

RECORD DRAWING

1. DATA PROVIDED BY: _____ TITLE: _____
   THIS WILL SERVE TO CERTIFY THAT THESE RECORD DRAWINGS ARE A TRUE AND ACCURATE REPRESENTATION OF THE PROJECT AS CONSTRUCTED.
   CONTRACTOR: _____
   BY: _____ TITLE: _____ DATE: _____
2. DATA TRANSFERRED BY: _____ TITLE: _____
   COMPANY: _____ DATE: _____
3. BASED ON PERIODIC FIELD OBSERVATIONS BY THE ENGINEER (OR AN INDIVIDUAL UNDER HIS/HER DIRECT SUPERVISION), THE CONTRACTOR-PROVIDED DATA APPEARS TO REPRESENT THE PROJECT AS CONSTRUCTED.
   DATA TRANSFER CHECKED BY: _____ TITLE: _____
   COMPANY: _____ DATE: _____
   BY: _____

| DATA | DRAWN BY | CHECKED BY |
|---|---|---|
| BASE | TS | MJ |
| TOPOGRAPHY | BW | BW |
| PROFILE | AA | JK |
| STORM SEWER | MV | JH |
| WATER/SANITARY SEWER | CB | JK |
| GAS | CB | JK |
| TELEPHONE | CB | JK |
| ELECTRIC | JH | TK |
| DESIGN | AA | JK |
| QUANTITIES | AA | JK |
| PRELIMINARY/FINAL | AA | JK |
| MUNICIPAL/STATE | AA | JK |

PLAN CHECK

GRAPHIC 60 30 0 30 60 SCALE

| FIELD BOOKS | BM NO. | LOCATION | ELEV. |
|---|---|---|---|
| DESIGN CRW BOOK No. 149, 169, | CB 7D | See MOA Benchmark Book, Page D-56 | 94.77 |
| 195 & 196 | CB 7C | See MOA Benchmark Book, Page D-17 | 106.10 |
| STAKING | GAAB 86 | See MOA Benchmark Book, Page D-18 | 104.53 |
| | | | |
| | | | |
| | | | |
| ASBUILT | | | |
| CONTRACTOR | BASIS OF THIS DATUM GAAB 1972 ADJUST | | |
| INSPECTOR | | | |

CONSTRUCTION RECORD — VERTICAL DATUM

| REV | DATE | DESCRIPTION | BY |
|---|---|---|---|
| | | | |
| | | | |
| | | | |
| | | | |
| | | | |
| | | | |
| | | | |
| | | | |

REVISIONS

CRW ENGINEERING GROUP, LLC
3940 ARCTIC BLVD. SUITE 300
ANCHORAGE, ALASKA 99503
PHONE: (907) 562-3252
#AECL882-AK

CONSULTANT

STATE OF ALASKA 49TH
Alma O. Abaza
CE-135451
REGISTERED PROFESSIONAL ENGINEER

SEAL

MUNICIPALITY OF ANCHORAGE

PROJECT MANAGEMENT AND ENGINEERING DEPARTMENT

16-29 W. 32ND AVENUE & E. 33RD AVENUE UPGRADES SCHED A
ARCTIC BOULEVARD TO OLD SEWARD HIGHWAY

ROADWAY PLAN AND PROFILE

W. 32ND AVENUE
BOP TO STA 106+00

SCALE HOR. 1"=30' VER. 1"=3'
GRID SW1629, SW1630, SW1631
DATE JAN 2020
STATUS 65%
SHEET R1 of R37

File: J:\JobsData\10138.00 W 32nd And E 33rd Avenue Upgrade\00 CADD\01 Working Set\01 Civil\01 Design\10138.00 Plan And Profile - Roadway.dwg

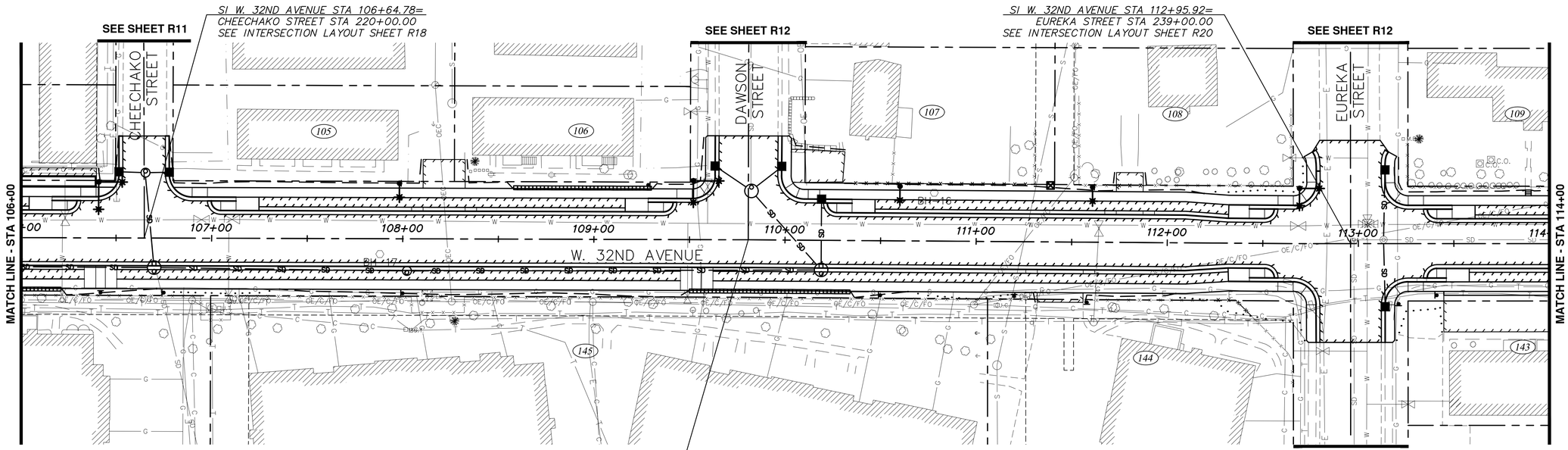


**NOTES:**

1. SEE ROADWAY SUMMARY TABLE (T) SHEETS FOR DETAILED ROADWAY INFORMATION.
2. SEE ROADWAY DETAIL (D) SHEETS FOR ROADWAY DETAILS.
3. FOR DETAILED SOILS INFORMATION, SEE THE SPECIFICATIONS.
4. SEE STORM DRAIN (SD) SHEETS FOR LOCATIONS AND ELEVATIONS OF STORM DRAIN PIPES & STRUCTURES.
5. SEE SURVEY CONTROL (V) SHEETS FOR PROJECT CENTERLINE ALIGNMENT DATA.
6. SEE ILLUMINATION (I) SHEETS FOR ROADWAY LIGHTING INFORMATION.
7. THE DEMOLITION ITEMS REMOVED AS SHOWN ON THE DEMOLITION (B) SHEETS ARE NOT SHOWN FOR CLARITY.

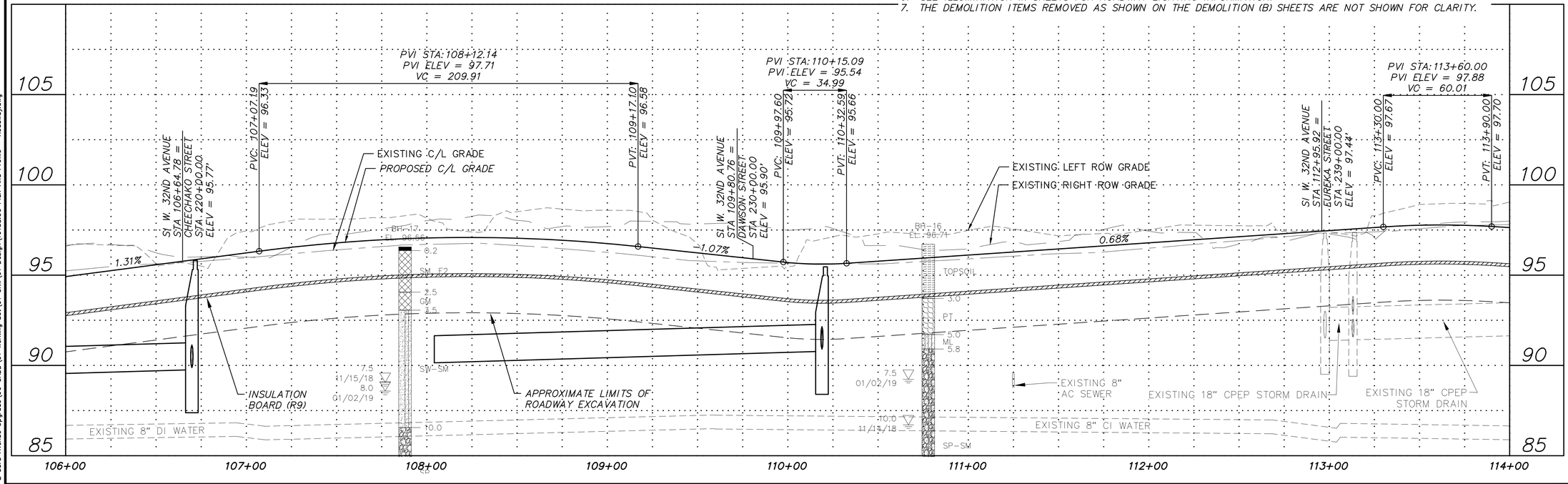


**RECORD DRAWING**

1. DATA PROVIDED BY: _____ TITLE: _____
   THIS WILL SERVE TO CERTIFY THAT THESE RECORD DRAWINGS ARE A TRUE AND ACCURATE REPRESENTATION OF THE PROJECT AS CONSTRUCTED.
   CONTRACTOR: _____
   BY: _____ TITLE: _____ DATE: _____
2. DATA TRANSFERRED BY: _____ TITLE: _____
   COMPANY: _____ DATE: _____
3. BASED ON PERIODIC FIELD OBSERVATIONS BY THE ENGINEER (OR AN INDIVIDUAL UNDER HIS/HER DIRECT SUPERVISION), THE CONTRACTOR-PROVIDED DATA APPEARS TO REPRESENT THE PROJECT AS CONSTRUCTED.
   DATA TRANSFER CHECKED BY: _____ TITLE: _____
   COMPANY: _____ DATE: _____
   BY: _____

| DATA | DRAWN BY | CHECKED BY |
|---|---|---|
| BASE | TS | MJ |
| TOPOGRAPHY | BW | BW |
| PROFILE | AA | JK |
| STORM SEWER | MV | JH |
| WATER/SANITARY SEWER | CB | JK |
| GAS | CB | JK |
| TELEPHONE | CB | JK |
| ELECTRIC | JH | TK |
| DESIGN | AA | JK |
| QUANTITIES | AA | JK |
| PRELIMINARY/FINAL | AA | JK |
| MUNICIPAL/STATE | AA | JK |

PLAN CHECK

GRAPHIC SCALE 60 30 0 30 60

| FIELD BOOKS | BM NO. | LOCATION | ELEV. |
|---|---|---|---|
| DESIGN CRW BOOK No. 149, 169, | CB 7D | See MOA Benchmark Book, Page D-56 | 94.77 |
| 195 & 196 | CB 7C | See MOA Benchmark Book, Page D-17 | 106.10 |
| STAKING | GAAB 86 | See MOA Benchmark Book, Page D-18 | 104.53 |
| | | | |
| | | | |
| ASBUILT | | | |
| CONTRACTOR | BASIS OF THIS DATUM GAAB 1972 ADJUST | | |
| INSPECTOR | | | |

CONSTRUCTION RECORD — VERTICAL DATUM

| REV | DATE | DESCRIPTION | BY |
|---|---|---|---|
| | | | |

REVISIONS

CRW ENGINEERING GROUP, LLC
3940 ARCTIC BLVD. SUITE 300
ANCHORAGE, ALASKA 99503
PHONE: (907) 562-3252
#AECL882-AK

CONSULTANT

STATE OF ALASKA 49TH
Alma O. Abaza
CE-135451
REGISTERED PROFESSIONAL ENGINEER

SEAL

MUNICIPALITY OF ANCHORAGE

PROJECT MANAGEMENT AND ENGINEERING DEPARTMENT

16-29 W. 32ND AVENUE & E. 33RD AVENUE UPGRADES ARCTIC BOULEVARD TO OLD SEWARD HIGHWAY SCHED A

# ROADWAY PLAN AND PROFILE

W. 32ND AVENUE
STA 106+00 TO STA 114+00

SCALE HOR. 1"=30' VER. 1"=3'
GRID SW1629, SW1630, SW1631
DATE JAN 2020
STATUS 65%
SHEET R2 of R37

File: J:\JobsData\10138.00 W 32nd And E 33rd Avenue Upgrade\00 CADD\01 Working Set\01 Civil\01 Design\10138.00 Plan And Profile - Roadway.dwg

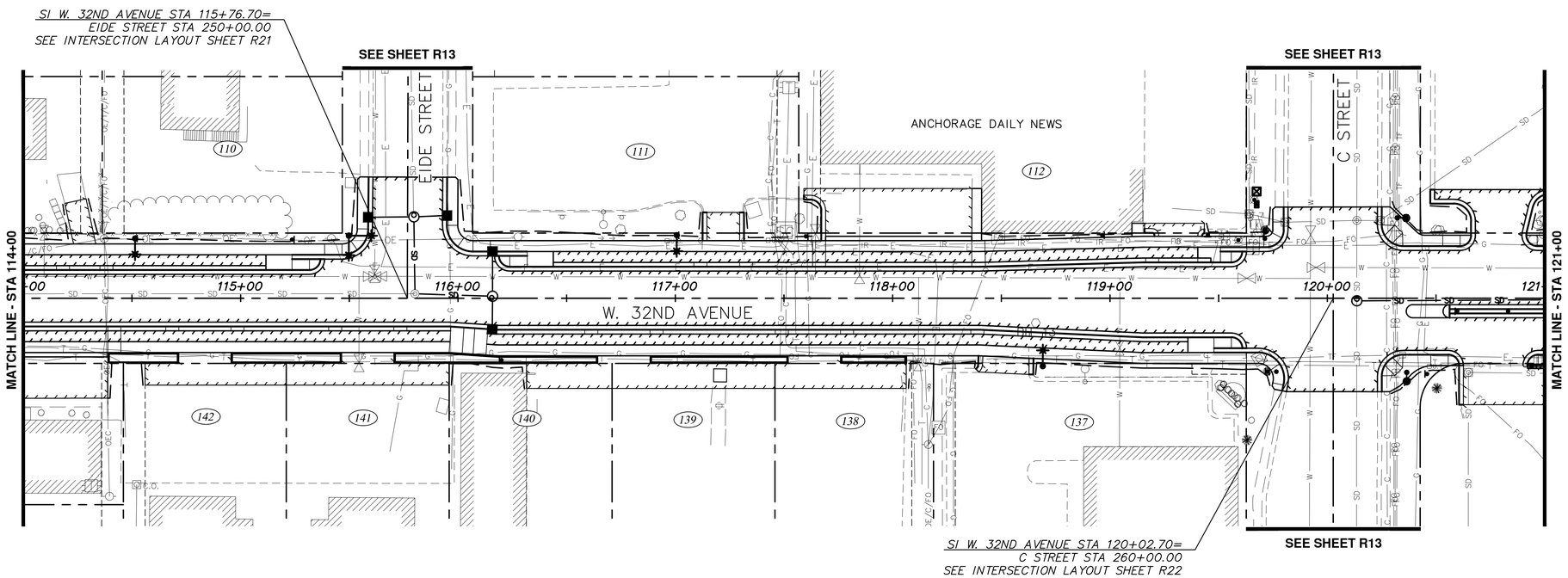


**NOTES:**

1. SEE ROADWAY SUMMARY TABLE (T) SHEETS FOR DETAILED ROADWAY INFORMATION.
2. SEE ROADWAY DETAIL (D) SHEETS FOR ROADWAY DETAILS.
3. FOR DETAILED SOILS INFORMATION, SEE THE SPECIFICATIONS.
4. SEE STORM DRAIN (SD) SHEETS FOR LOCATIONS AND ELEVATIONS OF STORM DRAIN PIPES & STRUCTURES.
5. SEE SURVEY CONTROL (V) SHEETS FOR PROJECT CENTERLINE ALIGNMENT DATA.
6. SEE ILLUMINATION (I) SHEETS FOR ROADWAY LIGHTING INFORMATION.
7. THE DEMOLITION ITEMS REMOVED AS SHOWN ON THE DEMOLITION (B) SHEETS ARE NOT SHOWN FOR CLARITY.

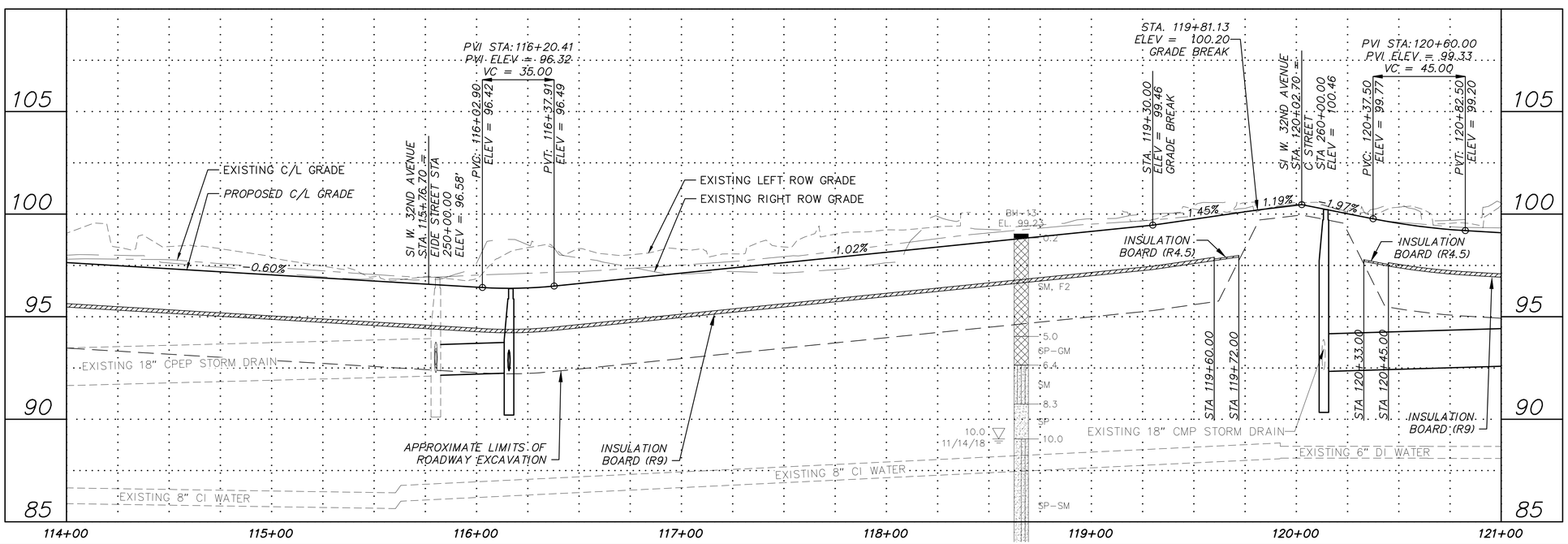


**RECORD DRAWING**

1. DATA PROVIDED BY: _____ TITLE: _____
   THIS WILL SERVE TO CERTIFY THAT THESE RECORD DRAWINGS ARE A TRUE AND ACCURATE REPRESENTATION OF THE PROJECT AS CONSTRUCTED.
   CONTRACTOR: _____
   BY: _____ TITLE: _____ DATE: _____
2. DATA TRANSFERRED BY: _____ TITLE: _____
   COMPANY: _____ DATE: _____
3. BASED ON PERIODIC FIELD OBSERVATIONS BY THE ENGINEER (OR AN INDIVIDUAL UNDER HIS/HER DIRECT SUPERVISION), THE CONTRACTOR-PROVIDED DATA APPEARS TO REPRESENT THE PROJECT AS CONSTRUCTED.
   DATA TRANSFER CHECKED BY: _____ TITLE: _____
   COMPANY: _____ DATE: _____
   BY: _____

| DATA | DRAWN BY | CHECKED BY |
|---|---|---|
| BASE | TS | MJ |
| TOPOGRAPHY | BW | BW |
| PROFILE | AA | JK |
| STORM SEWER | MV | JH |
| WATER/SANITARY SEWER | CB | JK |
| GAS | CB | JK |
| TELEPHONE | CB | JK |
| ELECTRIC | JH | TK |
| DESIGN | AA | JK |
| QUANTITIES | AA | JK |
| PRELIMINARY/FINAL | AA | JK |
| MUNICIPAL/STATE | AA | JK |

PLAN CHECK

GRAPHIC 60 30 0 30 60 SCALE

| FIELD BOOKS | BM NO. | LOCATION | ELEV. |
|---|---|---|---|
| DESIGN CRW BOOK No. 149, 169, | CB 7D | See MOA Benchmark Book, Page D-56 | 94.77 |
| 195 & 196 | CB 7C | See MOA Benchmark Book, Page D-17 | 106.10 |
| STAKING | GAAB 86 | See MOA Benchmark Book, Page D-18 | 104.53 |
| ASBUILT | | | |
| CONTRACTOR | BASIS OF THIS DATUM GAAB 1972 ADJUST | | |
| INSPECTOR | | | |

CONSTRUCTION RECORD — VERTICAL DATUM

| REV | DATE | DESCRIPTION | BY |
|---|---|---|---|
| | | | |

REVISIONS

CRW ENGINEERING GROUP, LLC
3940 ARCTIC BLVD. SUITE 300
ANCHORAGE, ALASKA 99503
PHONE: (907) 562-3252
#AECL882-AK

CONSULTANT

STATE OF ALASKA 49TH
Alma O. Abaza
CE-135451
REGISTERED PROFESSIONAL ENGINEER

SEAL

MUNICIPALITY OF ANCHORAGE

PROJECT MANAGEMENT AND ENGINEERING DEPARTMENT

16-29 W. 32ND AVENUE & E. 33RD AVENUE UPGRADES ARCTIC BOULEVARD TO OLD SEWARD HIGHWAY SCHED A

ROADWAY PLAN AND PROFILE

W. 32ND AVENUE
STA 114+00 TO STA 121+00

SCALE HOR. 1"=30' VER. 1"=3' | GRID SW1629, SW1630, SW1631 | DATE JAN 2020 | STATUS 65% | SHEET R3 of R37

File: J:\JobsData\10138.00 W 32nd And E 33rd Avenue Upgrade\00 CADD\01 Working Set\01 Civil\01 Design\10138.00 Plan And Profile - Roadway.dwg

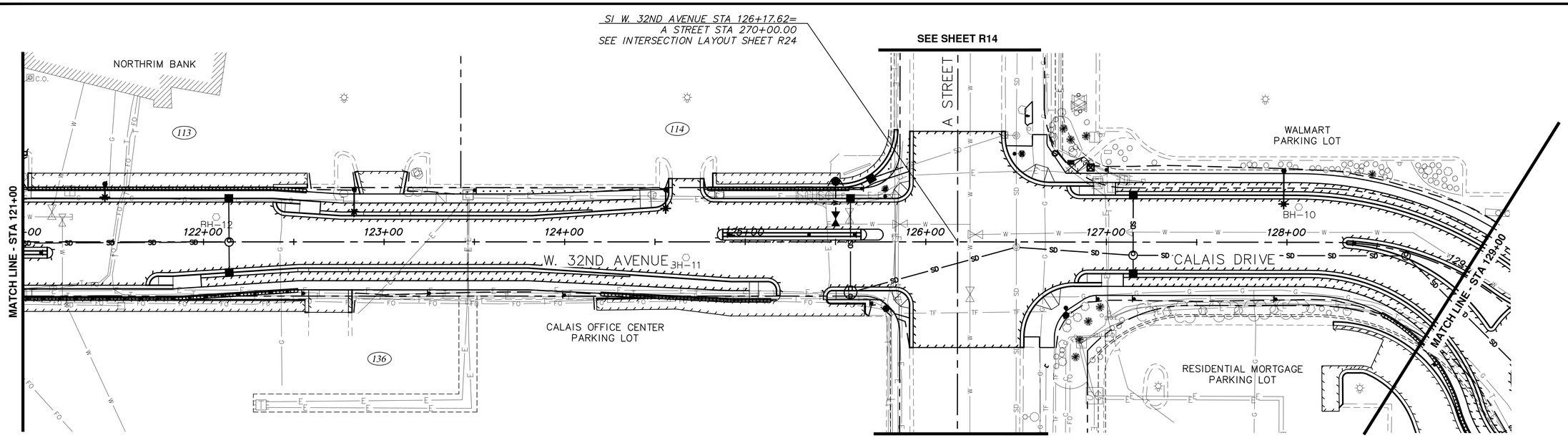


**NOTES:**

1. SEE ROADWAY SUMMARY TABLE (T) SHEETS FOR DETAILED ROADWAY INFORMATION.
2. SEE ROADWAY DETAIL (D) SHEETS FOR ROADWAY DETAILS.
3. FOR DETAILED SOILS INFORMATION, SEE THE SPECIFICATIONS.
4. SEE STORM DRAIN (SD) SHEETS FOR LOCATIONS AND ELEVATIONS OF STORM DRAIN PIPES & STRUCTURES.
5. SEE SURVEY CONTROL (V) SHEETS FOR PROJECT CENTERLINE ALIGNMENT DATA.
6. SEE ILLUMINATION (I) SHEETS FOR ROADWAY LIGHTING INFORMATION.
7. THE DEMOLITION ITEMS REMOVED AS SHOWN ON THE DEMOLITION (B) SHEETS ARE NOT SHOWN FOR CLARITY.

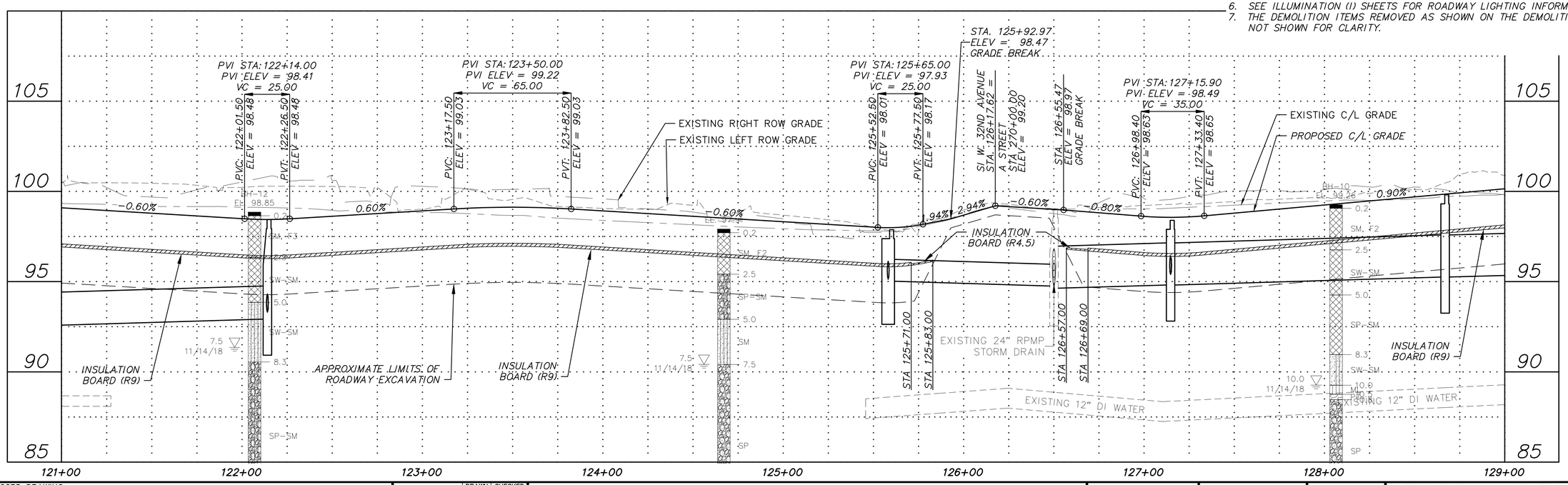


**RECORD DRAWING**

1. DATA PROVIDED BY: _____ TITLE: _____
   THIS WILL SERVE TO CERTIFY THAT THESE RECORD DRAWINGS ARE A TRUE AND ACCURATE REPRESENTATION OF THE PROJECT AS CONSTRUCTED.
   CONTRACTOR: _____
   BY: _____ TITLE: _____ DATE: _____
2. DATA TRANSFERRED BY: _____ TITLE: _____
   COMPANY: _____ DATE: _____
3. BASED ON PERIODIC FIELD OBSERVATIONS BY THE ENGINEER (OR AN INDIVIDUAL UNDER HIS/HER DIRECT SUPERVISION), THE CONTRACTOR-PROVIDED DATA APPEARS TO REPRESENT THE PROJECT AS CONSTRUCTED.
   DATA TRANSFER CHECKED BY: _____ TITLE: _____
   COMPANY: _____ DATE: _____
   BY: _____

| DATA | DRAWN BY | CHECKED BY |
|---|---|---|
| BASE | TS | MJ |
| TOPOGRAPHY | BW | BW |
| PROFILE | AA | JK |
| STORM SEWER | MV | JH |
| WATER/SANITARY SEWER | CB | JK |
| GAS | CB | JK |
| TELEPHONE | CB | JK |
| ELECTRIC | JH | TK |
| DESIGN | AA | JK |
| QUANTITIES | AA | JK |
| PRELIMINARY/FINAL | AA | JK |
| MUNICIPAL/STATE | AA | JK |

PLAN CHECK

GRAPHIC 60 30 0 30 60 SCALE

| FIELD BOOKS | BM NO. | LOCATION | ELEV. |
|---|---|---|---|
| DESIGN CRW BOOK No. 149, 169, | CB 7D | See MOA Benchmark Book, Page D-56 | 94.77 |
| 195 & 196 | CB 7C | See MOA Benchmark Book, Page D-17 | 106.10 |
| STAKING | GAAB 86 | See MOA Benchmark Book, Page D-18 | 104.53 |
| | | | |
| | | | |
| | | | |
| ASBUILT | | | |
| CONTRACTOR | BASIS OF THIS DATUM GAAB 1972 ADJUST | | |
| INSPECTOR | | | |

CONSTRUCTION RECORD — VERTICAL DATUM

| REV | DATE | DESCRIPTION | BY |
|---|---|---|---|
| | | | |

REVISIONS

CRW ENGINEERING GROUP, LLC
3940 ARCTIC BLVD. SUITE 300
ANCHORAGE, ALASKA 99503
PHONE: (907) 562-3252
#AECL882-AK

CONSULTANT

STATE OF ALASKA 49TH
Alma O. Abaza
CE-135451
REGISTERED PROFESSIONAL ENGINEER

SEAL

MUNICIPALITY OF ANCHORAGE

PROJECT MANAGEMENT AND ENGINEERING DEPARTMENT

16-29 W. 32ND AVENUE & E. 33RD AVENUE UPGRADES ARCTIC BOULEVARD TO OLD SEWARD HIGHWAY SCHED A

# ROADWAY PLAN AND PROFILE

W. 32ND AVENUE / CALAIS DRIVE
STA 121+00 TO STA 129+00

SCALE HOR. 1"=30' VER. 1"=3' | GRID SW1629, SW1630, SW1631 | DATE JAN 2020 | STATUS 65% | SHEET R4 of R37

File: J:\JobsData\10138.00 W 32nd And E 33rd Avenue Upgrade\00 CADD\01 Working Set\01 Civil\01 Design\10138.00 Plan And Profile - Roadway.dwg

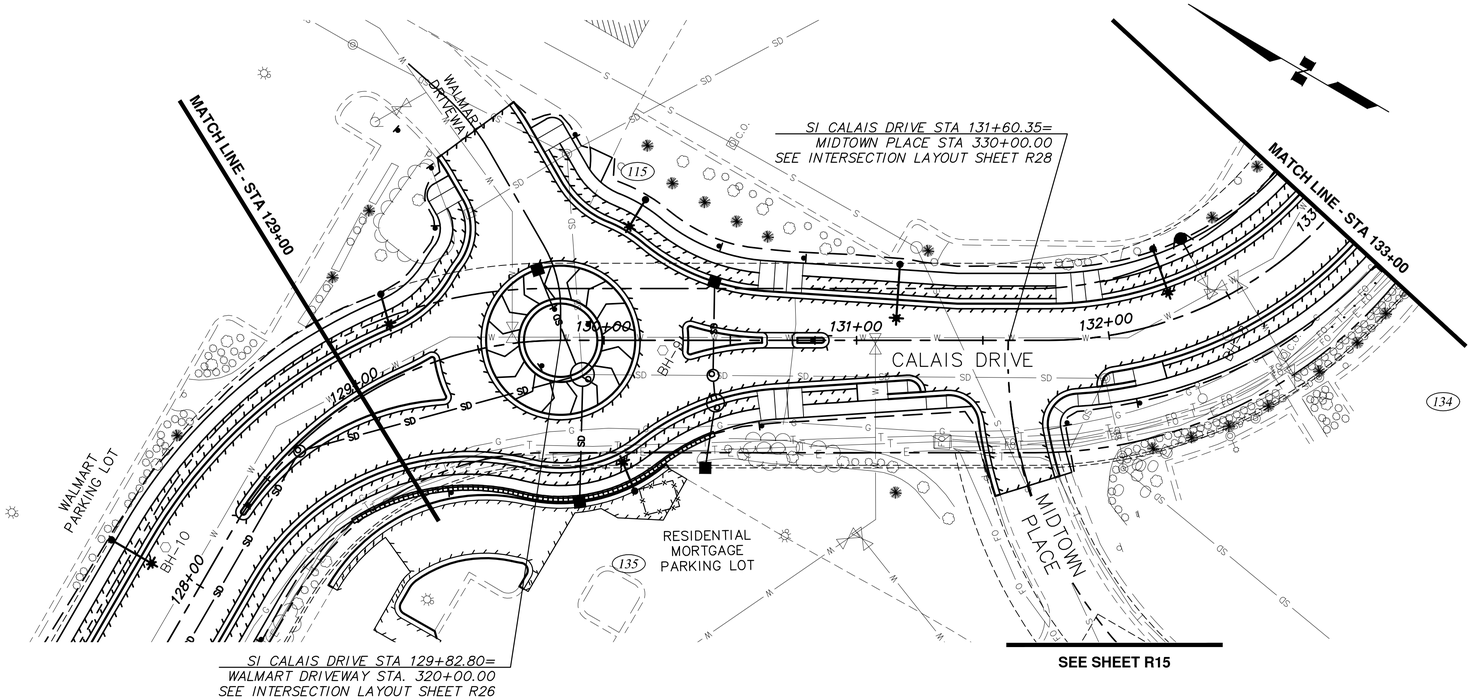


**NOTES:**

1. SEE ROADWAY SUMMARY TABLE (T) SHEETS FOR DETAILED ROADWAY INFORMATION.
2. SEE ROADWAY DETAIL (D) SHEETS FOR ROADWAY DETAILS.
3. FOR DETAILED SOILS INFORMATION, SEE THE SPECIFICATIONS.
4. SEE STORM DRAIN (SD) SHEETS FOR LOCATIONS AND ELEVATIONS OF STORM DRAIN PIPES & STRUCTURES.
5. SEE SURVEY CONTROL (V) SHEETS FOR PROJECT CENTERLINE ALIGNMENT DATA.
6. SEE ILLUMINATION (I) SHEETS FOR ROADWAY LIGHTING INFORMATION.
7. THE DEMOLITION ITEMS REMOVED AS SHOWN ON THE DEMOLITION (B) SHEETS ARE NOT SHOWN FOR CLARITY.

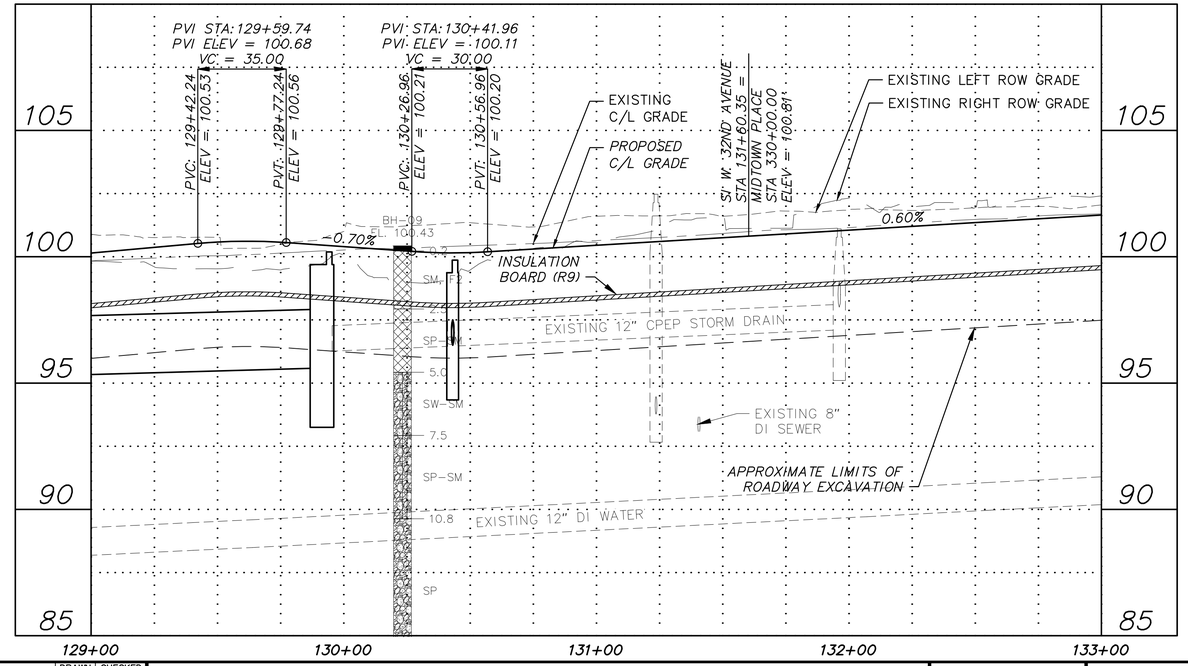


**RECORD DRAWING**

1. DATA PROVIDED BY: _____ TITLE: _____
   THIS WILL SERVE TO CERTIFY THAT THESE RECORD DRAWINGS ARE A TRUE AND ACCURATE REPRESENTATION OF THE PROJECT AS CONSTRUCTED.
   CONTRACTOR: _____
   BY: _____ TITLE: _____ DATE: _____
2. DATA TRANSFERRED BY: _____ TITLE: _____
   COMPANY: _____ DATE: _____
3. BASED ON PERIODIC FIELD OBSERVATIONS BY THE ENGINEER (OR AN INDIVIDUAL UNDER HIS/HER DIRECT SUPERVISION), THE CONTRACTOR-PROVIDED DATA APPEARS TO REPRESENT THE PROJECT AS CONSTRUCTED.
   DATA TRANSFER CHECKED BY: _____ TITLE: _____
   COMPANY: _____ DATE: _____
   BY: _____

| DATA | DRAWN BY | CHECKED BY |
|---|---|---|
| BASE | TS | MJ |
| TOPOGRAPHY | BW | BW |
| PROFILE | AA | JK |
| STORM SEWER | MV | JH |
| WATER/SANITARY SEWER | CB | JK |
| GAS | CB | JK |
| TELEPHONE | CB | JK |
| ELECTRIC | JH | TK |
| DESIGN | AA | JK |
| QUANTITIES | AA | JK |
| PRELIMINARY/FINAL | AA | JK |
| MUNICIPAL/STATE | AA | JK |
| PLAN CHECK | | |

GRAPHIC 60 30 0 30 60 SCALE

| FIELD BOOKS | BM NO. | LOCATION | ELEV. |
|---|---|---|---|
| DESIGN CRW BOOK No. 149, 169, | CB 7D | See MOA Benchmark Book, Page D-56 | 94.77 |
| 195 & 196 | CB 7C | See MOA Benchmark Book, Page D-17 | 106.10 |
| STAKING | GAAB 86 | See MOA Benchmark Book, Page D-18 | 104.53 |
| | | | |
| | | | |
| ASBUILT | | | |
| CONTRACTOR | BASIS OF THIS DATUM GAAB 1972 ADJUST | | |
| INSPECTOR | | | |

CONSTRUCTION RECORD — VERTICAL DATUM

| REV | DATE | DESCRIPTION | BY |
|---|---|---|---|
| | | | |
| | | | |
| | | | |
| | | | |
| | | | |
| | | | |
| | | | |
| | | | |

REVISIONS

CRW ENGINEERING GROUP, LLC
3940 ARCTIC BLVD. SUITE 300
ANCHORAGE, ALASKA 99503
PHONE: (907) 562-3252
#AECL882-AK

CONSULTANT

STATE OF ALASKA 49TH
Alma O. Abaza
CE-135451
REGISTERED PROFESSIONAL ENGINEER

SEAL

MUNICIPALITY OF ANCHORAGE

PROJECT MANAGEMENT AND ENGINEERING DEPARTMENT

16-29 W. 32ND AVENUE & E. 33RD AVENUE UPGRADES ARCTIC BOULEVARD TO OLD SEWARD HIGHWAY SCHED A

# ROADWAY PLAN AND PROFILE

CALAIS DRIVE
STA 129+00 TO STA 133+00

SCALE HOR. 1"=30' VER. 1"=3' | GRID SW1629, SW1630, SW1631 | DATE JAN 2020 | STATUS 65% | SHEET R5 of R37

File: J:\JobData\10138.00 W 32nd And E 33rd Avenue Upgrade\00 CADD\01 Working Set\01 Civil\01 Design\10138.00 Plan And Profile - Roadway.dwg

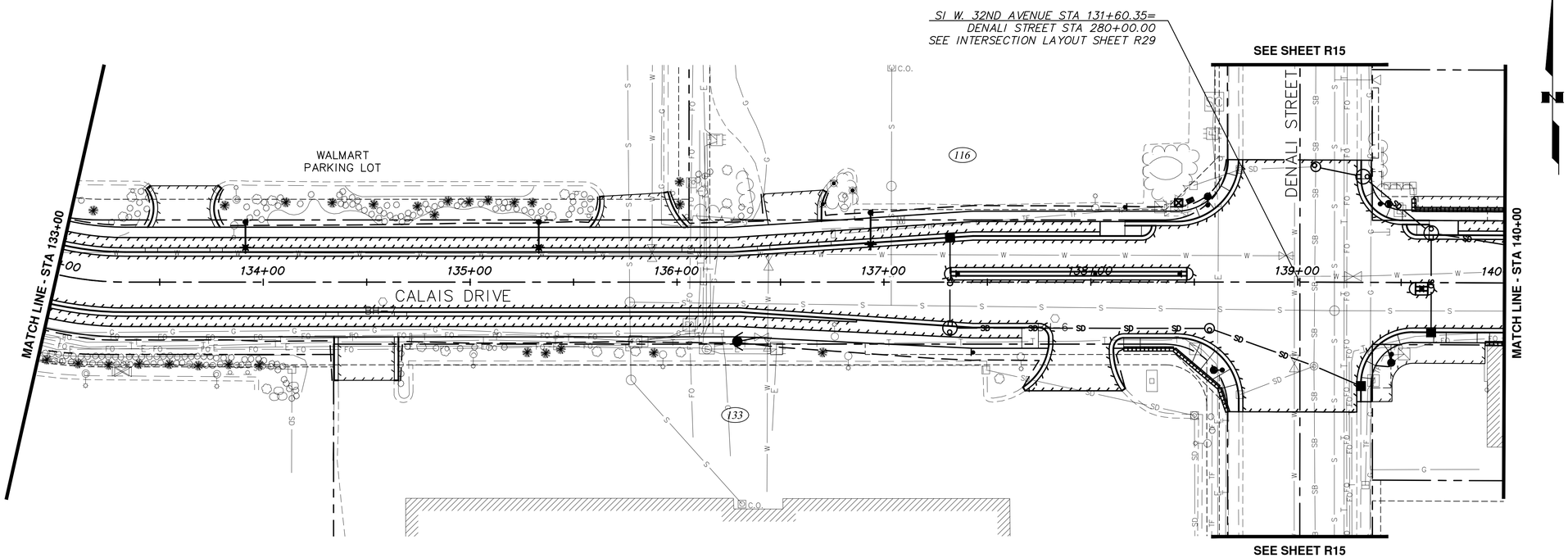


NOTES:

1. SEE ROADWAY SUMMARY TABLE (T) SHEETS FOR DETAILED ROADWAY INFORMATION.
2. SEE ROADWAY DETAIL (D) SHEETS FOR ROADWAY DETAILS.
3. FOR DETAILED SOILS INFORMATION, SEE THE SPECIFICATIONS.
4. SEE STORM DRAIN (SD) SHEETS FOR LOCATIONS AND ELEVATIONS OF STORM DRAIN PIPES & STRUCTURES.
5. SEE SURVEY CONTROL (V) SHEETS FOR PROJECT CENTERLINE ALIGNMENT DATA.
6. SEE ILLUMINATION (I) SHEETS FOR ROADWAY LIGHTING INFORMATION.
7. THE DEMOLITION ITEMS REMOVED AS SHOWN ON THE DEMOLITION (B) SHEETS ARE NOT SHOWN FOR CLARITY.

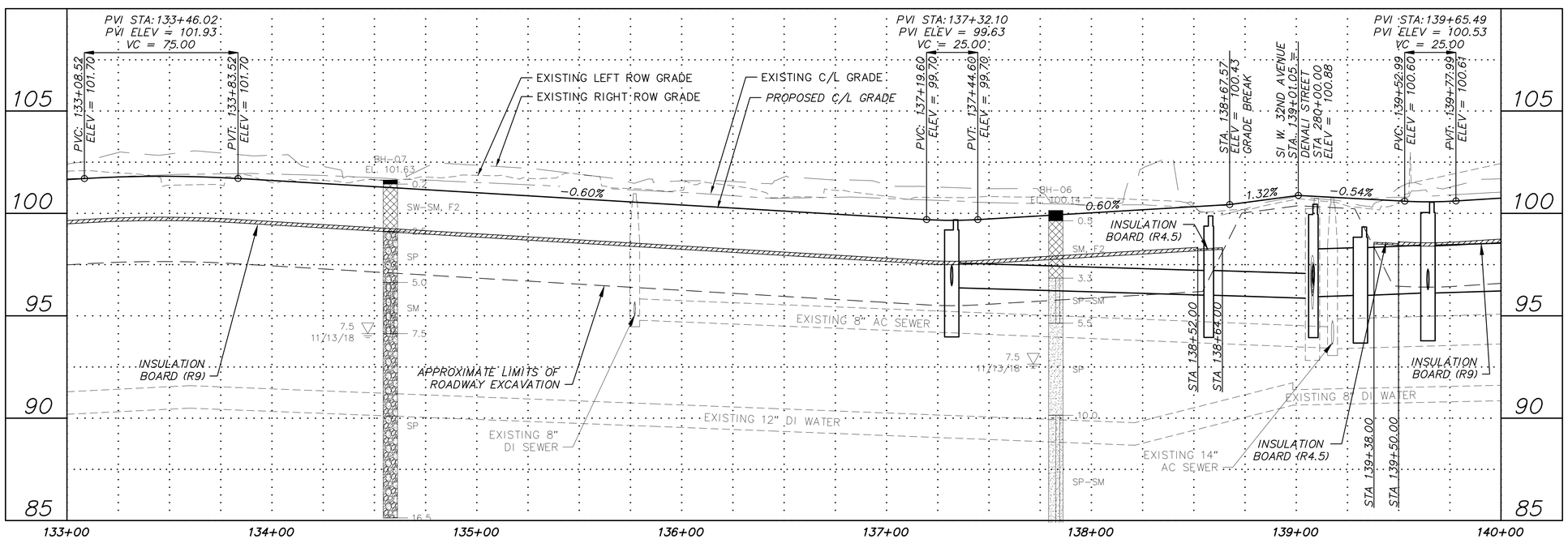


**RECORD DRAWING**

1. DATA PROVIDED BY: _____ TITLE: _____
   THIS WILL SERVE TO CERTIFY THAT THESE RECORD DRAWINGS ARE A TRUE AND ACCURATE REPRESENTATION OF THE PROJECT AS CONSTRUCTED.
   CONTRACTOR: _____
   BY: _____ TITLE: _____ DATE: _____
2. DATA TRANSFERRED BY: _____ TITLE: _____
   COMPANY: _____ DATE: _____
3. BASED ON PERIODIC FIELD OBSERVATIONS BY THE ENGINEER (OR AN INDIVIDUAL UNDER HIS/HER DIRECT SUPERVISION), THE CONTRACTOR-PROVIDED DATA APPEARS TO REPRESENT THE PROJECT AS CONSTRUCTED.
   DATA TRANSFER CHECKED BY: _____ TITLE: _____
   COMPANY: _____ DATE: _____
   BY: _____

| DATA | DRAWN BY | CHECKED BY |
|---|---|---|
| BASE | TS | MJ |
| TOPOGRAPHY | BW | BW |
| PROFILE | AA | JK |
| STORM SEWER | MV | JH |
| WATER/SANITARY SEWER | CB | JK |
| GAS | CB | JK |
| TELEPHONE | CB | JK |
| ELECTRIC | JH | TK |
| DESIGN | AA | JK |
| QUANTITIES | AA | JK |
| PRELIMINARY/FINAL | AA | JK |
| MUNICIPAL/STATE | AA | JK |

PLAN CHECK

GRAPHIC 60 30 0 30 60 SCALE

| FIELD BOOKS | BM NO. | LOCATION | ELEV. |
|---|---|---|---|
| DESIGN CRW BOOK No. 149, 169, | CB 7D | See MOA Benchmark Book, Page D-56 | 94.77 |
| 195 & 196 | CB 7C | See MOA Benchmark Book, Page D-17 | 106.10 |
| STAKING | GAAB 86 | See MOA Benchmark Book, Page D-18 | 104.53 |
| ASBUILT | | | |
| CONTRACTOR | BASIS OF THIS DATUM GAAB 1972 ADJUST | | |
| INSPECTOR | | | |

CONSTRUCTION RECORD

VERTICAL DATUM

| REV | DATE | DESCRIPTION | BY |
|---|---|---|---|
| | | | |

REVISIONS

CRW ENGINEERING GROUP, LLC
3940 ARCTIC BLVD. SUITE 300
ANCHORAGE, ALASKA 99503
PHONE: (907) 562-3252
@AECLB82-AK

CONSULTANT

STATE OF ALASKA 49 TH
Alma O. Abaza
CE-135451
REGISTERED PROFESSIONAL ENGINEER

SEAL

MUNICIPALITY OF ANCHORAGE

PROJECT MANAGEMENT AND ENGINEERING DEPARTMENT

16-29 W. 32ND AVENUE & E. 33RD AVENUE UPGRADES ARCTIC BOULEVARD TO OLD SEWARD HIGHWAY SCHED A

# ROADWAY PLAN AND PROFILE

CALAIS DRIVE
STA 133+00 TO STA 140+00

SCALE HOR. 1"=30' VER. 1"=3'
GRID SW1629, SW1630, SW1631
DATE JAN 2020
STATUS 65%
SHEET R6 of R37

File:J:\JobsData\101138.00 W 32nd And E 33rd Avenue Upgrade\00 CADD\01 Working Set\01 Civil\01 Design\101138.00 Plan And Profile - Roadway.dwg

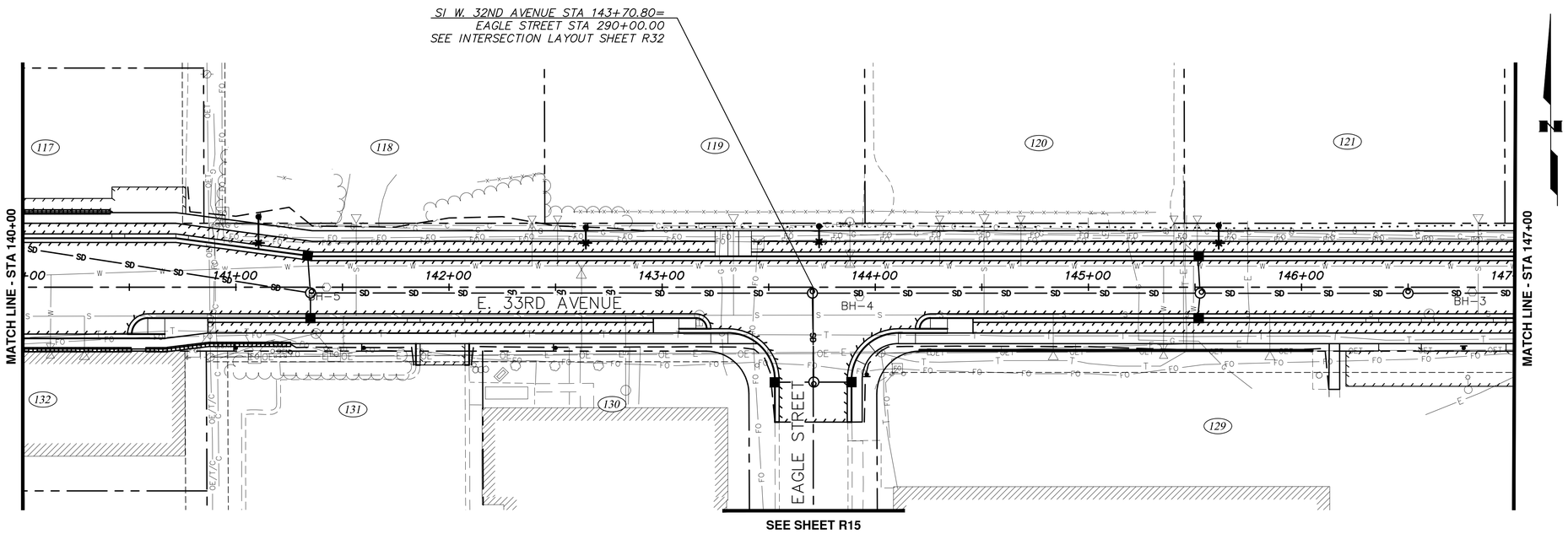


**NOTES:**

1. SEE ROADWAY SUMMARY TABLE (T) SHEETS FOR DETAILED ROADWAY INFORMATION.
2. SEE ROADWAY DETAIL (D) SHEETS FOR ROADWAY DETAILS.
3. FOR DETAILED SOILS INFORMATION, SEE THE SPECIFICATIONS.
4. SEE STORM DRAIN (SD) SHEETS FOR LOCATIONS AND ELEVATIONS OF STORM DRAIN PIPES & STRUCTURES.
5. SEE SURVEY CONTROL (V) SHEETS FOR PROJECT CENTERLINE ALIGNMENT DATA.
6. SEE ILLUMINATION (I) SHEETS FOR ROADWAY LIGHTING INFORMATION.
7. THE DEMOLITION ITEMS REMOVED AS SHOWN ON THE DEMOLITION (B) SHEETS ARE NOT SHOWN FOR CLARITY.

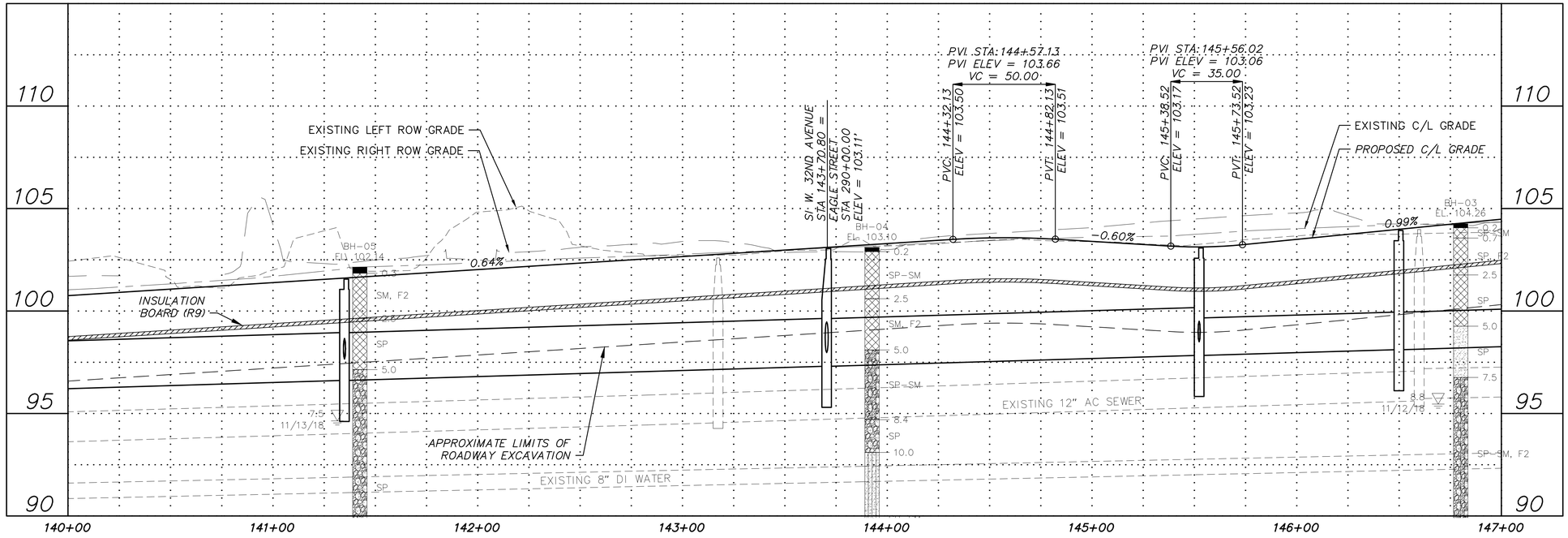


**RECORD DRAWING**

1. DATA PROVIDED BY: _____ TITLE: _____
   THIS WILL SERVE TO CERTIFY THAT THESE RECORD DRAWINGS ARE A TRUE AND ACCURATE REPRESENTATION OF THE PROJECT AS CONSTRUCTED.
   CONTRACTOR: _____
   BY: _____ TITLE: _____ DATE: _____
2. DATA TRANSFERRED BY: _____ TITLE: _____
   COMPANY: _____ DATE: _____
3. BASED ON PERIODIC FIELD OBSERVATIONS BY THE ENGINEER (OR AN INDIVIDUAL UNDER HIS/HER DIRECT SUPERVISION), THE CONTRACTOR-PROVIDED DATA APPEARS TO REPRESENT THE PROJECT AS CONSTRUCTED.
   DATA TRANSFER CHECKED BY: _____ TITLE: _____
   COMPANY: _____ DATE: _____
   BY: _____

| DATA | DRAWN BY | CHECKED BY |
|---|---|---|
| BASE | TS | MJ |
| TOPOGRAPHY | BW | BW |
| PROFILE | AA | JK |
| STORM SEWER | MV | JH |
| WATER/SANITARY SEWER | CB | JK |
| GAS | CB | JK |
| TELEPHONE | CB | JK |
| ELECTRIC | JH | TK |
| DESIGN | AA | JK |
| QUANTITIES | AA | JK |
| PRELIMINARY/FINAL | AA | JK |
| MUNICIPAL/STATE | AA | JK |

PLAN CHECK

GRAPHIC 60 30 0 30 60 SCALE

| FIELD BOOKS | BM NO. | LOCATION | ELEV. |
|---|---|---|---|
| DESIGN CRW BOOK No. 149, 169, | CB 7D | See MOA Benchmark Book, Page D-56 | 94.77 |
| 195 & 196 | CB 7C | See MOA Benchmark Book, Page D-17 | 106.10 |
| STAKING | GAAB 86 | See MOA Benchmark Book, Page D-18 | 104.53 |
| | | | |
| | | | |
| ASBUILT | | | |
| CONTRACTOR | BASIS OF THIS DATUM GAAB 1972 ADJUST | | |
| INSPECTOR | | | |

CONSTRUCTION RECORD — VERTICAL DATUM

| REV | DATE | DESCRIPTION | BY |
|---|---|---|---|
| | | | |
| | | | |
| | | | |
| | | | |
| | | | |
| | | | |
| | | | |
| | | | |

REVISIONS

CRW ENGINEERING GROUP, LLC
3940 ARCTIC BLVD. SUITE 300
ANCHORAGE, ALASKA 99503
PHONE: (907) 562-3252
#ACCL882-AK

CONSULTANT

STATE OF ALASKA 49TH — Alma O. Abaza CE-135451 — REGISTERED PROFESSIONAL ENGINEER

SEAL

MUNICIPALITY OF ANCHORAGE

PROJECT MANAGEMENT AND ENGINEERING DEPARTMENT

16-29 W. 32ND AVENUE & E. 33RD AVENUE UPGRADES — SCHED A
ARCTIC BOULEVARD TO OLD SEWARD HIGHWAY

# ROADWAY PLAN AND PROFILE

E. 33RD AVENUE
STA 140+00 TO STA 147+00

SCALE HOR. 1"=30' VER. 1"=3' | GRID SW1629, SW1630, SW1631 | DATE JAN 2020 | STATUS 65% | SHEET R7 of R37

File: J:\JobsData\10138.00 W 32nd And E 33rd Avenue Upgrade\00 CADD\01 Working Set\01 Civil\01 Design\10138.00 Plan And Profile - Roadway.dwg

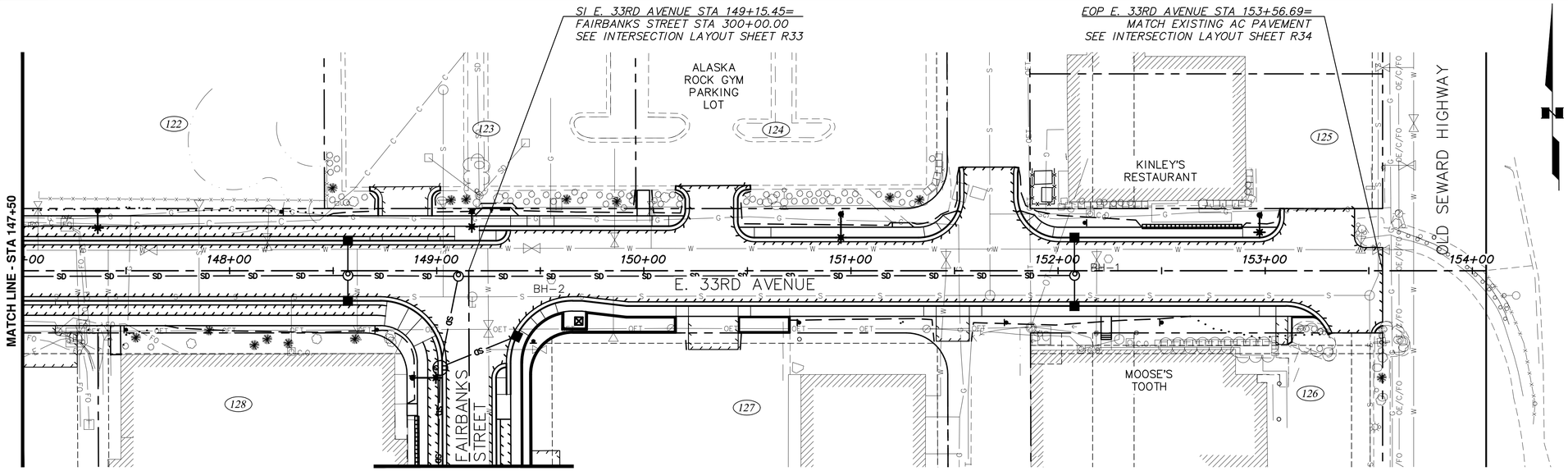


SEE SHEET R9

**NOTES:**

1. SEE ROADWAY SUMMARY TABLE (T) SHEETS FOR DETAILED ROADWAY INFORMATION.
2. SEE ROADWAY DETAIL (D) SHEETS FOR ROADWAY DETAILS.
3. FOR DETAILED SOILS INFORMATION, SEE THE SPECIFICATIONS.
4. SEE STORM DRAIN (SD) SHEETS FOR LOCATIONS AND ELEVATIONS OF STORM DRAIN PIPES & STRUCTURES.
5. SEE SURVEY CONTROL (V) SHEETS FOR PROJECT CENTERLINE ALIGNMENT DATA.
6. SEE ILLUMINATION (I) SHEETS FOR ROADWAY LIGHTING INFORMATION.
7. THE DEMOLITION ITEMS REMOVED AS SHOWN ON THE DEMOLITION (B) SHEETS ARE NOT SHOWN FOR CLARITY.

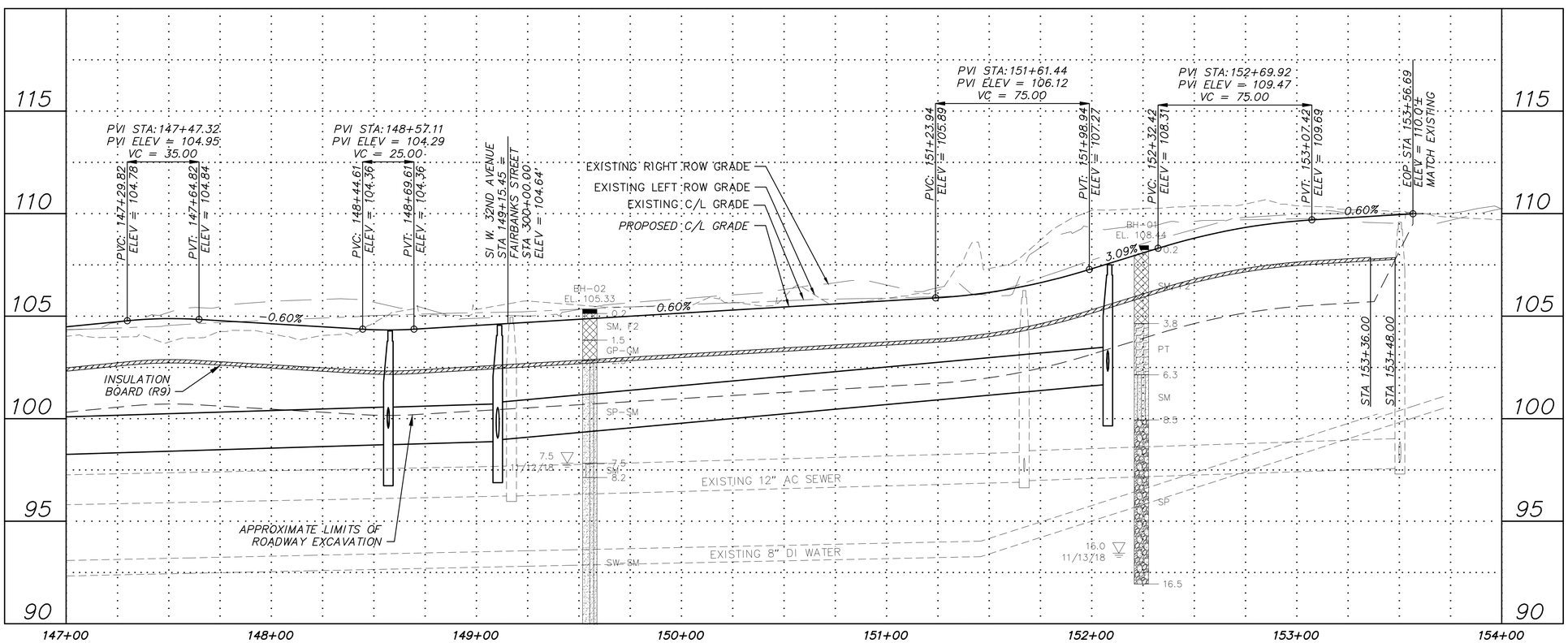


**RECORD DRAWING**

1. DATA PROVIDED BY: _____ TITLE: _____
   THIS WILL SERVE TO CERTIFY THAT THESE RECORD DRAWINGS ARE A TRUE AND ACCURATE REPRESENTATION OF THE PROJECT AS CONSTRUCTED.
   CONTRACTOR: _____
   BY: _____ TITLE: _____ DATE: _____
2. DATA TRANSFERRED BY: _____ TITLE: _____
   COMPANY: _____ DATE: _____
3. BASED ON PERIODIC FIELD OBSERVATIONS BY THE ENGINEER (OR AN INDIVIDUAL UNDER HIS/HER DIRECT SUPERVISION), THE CONTRACTOR-PROVIDED DATA APPEARS TO REPRESENT THE PROJECT AS CONSTRUCTED.
   DATA TRANSFER CHECKED BY: _____ TITLE: _____
   COMPANY: _____ DATE: _____
   BY: _____

| DATA | DRAWN BY | CHECKED BY |
|---|---|---|
| BASE | TS | MJ |
| TOPOGRAPHY | BW | BW |
| PROFILE | AA | JK |
| STORM SEWER | MV | JH |
| WATER/SANITARY SEWER | CB | JK |
| GAS | CB | JK |
| TELEPHONE | CB | JK |
| ELECTRIC | JH | TK |
| DESIGN | AA | JK |
| QUANTITIES | AA | JK |
| PRELIMINARY/FINAL | AA | JK |
| MUNICIPAL/STATE | AA | JK |

PLAN CHECK

GRAPHIC 60 30 0 30 60 SCALE

| FIELD BOOKS | BM NO. | LOCATION | ELEV. |
|---|---|---|---|
| DESIGN CRW BOOK No. 149, 169, | CB 7D | See MOA Benchmark Book, Page D-56 | 94.77 |
| 195 & 196 | CB 7C | See MOA Benchmark Book, Page D-17 | 106.10 |
| STAKING | GAAB 86 | See MOA Benchmark Book, Page D-18 | 104.53 |
| | | | |
| | | | |
| | | | |
| ASBUILT | | | |
| CONTRACTOR | BASIS OF THIS DATUM GAAB 1972 ADJUST | | |
| INSPECTOR | | | |

CONSTRUCTION RECORD — VERTICAL DATUM

| REV | DATE | DESCRIPTION | BY |
|---|---|---|---|
| | | | |
| | | | |
| | | | |
| | | | |
| | | | |
| | | | |
| | | | |
| | | | |

REVISIONS

CRW ENGINEERING GROUP, LLC
3940 ARCTIC BLVD. SUITE 300
ANCHORAGE, ALASKA 99503
PHONE: (907) 562-3252
#AECL882-AK

CONSULTANT

STATE OF ALASKA 49TH
Alma O. Abaza
CE-135451
REGISTERED PROFESSIONAL ENGINEER

SEAL

MUNICIPALITY OF ANCHORAGE

PROJECT MANAGEMENT AND ENGINEERING DEPARTMENT

16-29 W. 32ND AVENUE & E. 33RD AVENUE UPGRADES — SCHED A
ARCTIC BOULEVARD TO OLD SEWARD HIGHWAY

# ROADWAY PLAN AND PROFILE

E. 33RD AVENUE
STA 147+00 TO EOP

SCALE HOR. 1"=30' VER. 1"=3' | GRID SW1629, SW1630, SW1631 | DATE JAN 2020 | STATUS 65% | SHEET R8 of R37

File: J:\JobsData\10138.00 W 32nd And E 33rd Avenue Upgrade\00 CADD\01 Working Set\01 Civil\01 Design\10138.00 Plan And Profile - Roadway.dwg

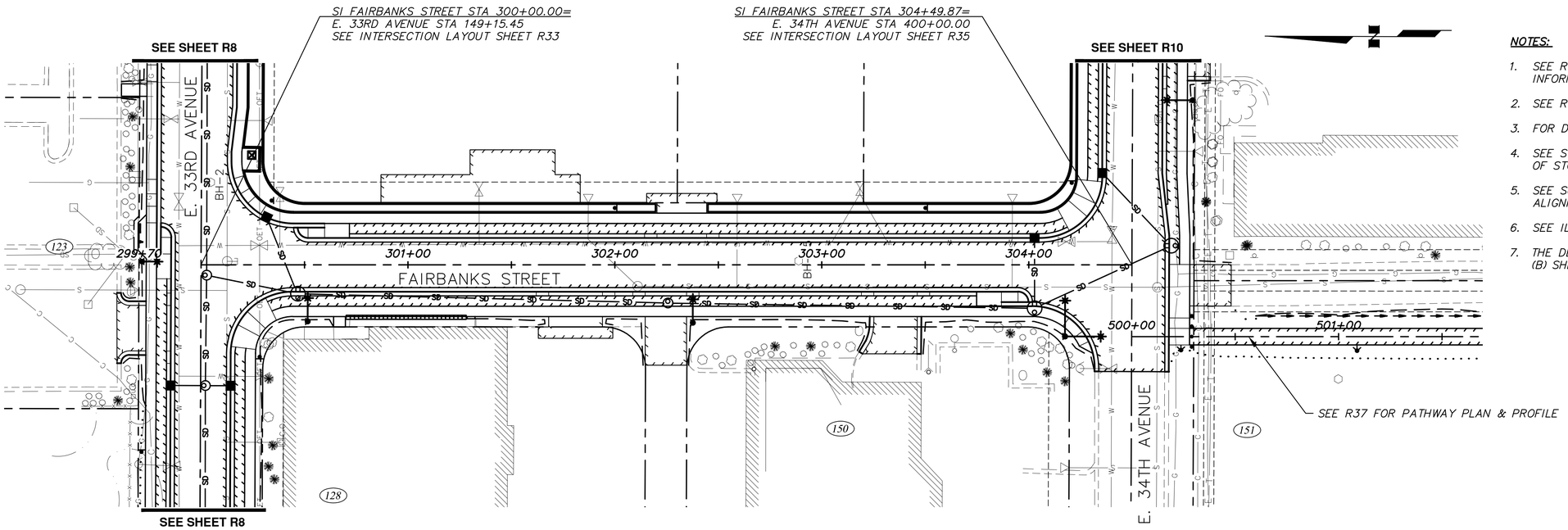


NOTES:

1. SEE ROADWAY SUMMARY TABLE (T) SHEETS FOR DETAILED ROADWAY INFORMATION.
2. SEE ROADWAY DETAIL (D) SHEETS FOR ROADWAY DETAILS.
3. FOR DETAILED SOILS INFORMATION, SEE THE SPECIFICATIONS.
4. SEE STORM DRAIN (SD) SHEETS FOR LOCATIONS AND ELEVATIONS OF STORM DRAIN PIPES & STRUCTURES.
5. SEE SURVEY CONTROL (V) SHEETS FOR PROJECT CENTERLINE ALIGNMENT DATA.
6. SEE ILLUMINATION (I) SHEETS FOR ROADWAY LIGHTING INFORMATION.
7. THE DEMOLITION ITEMS REMOVED AS SHOWN ON THE DEMOLITION (B) SHEETS ARE NOT SHOWN FOR CLARITY.

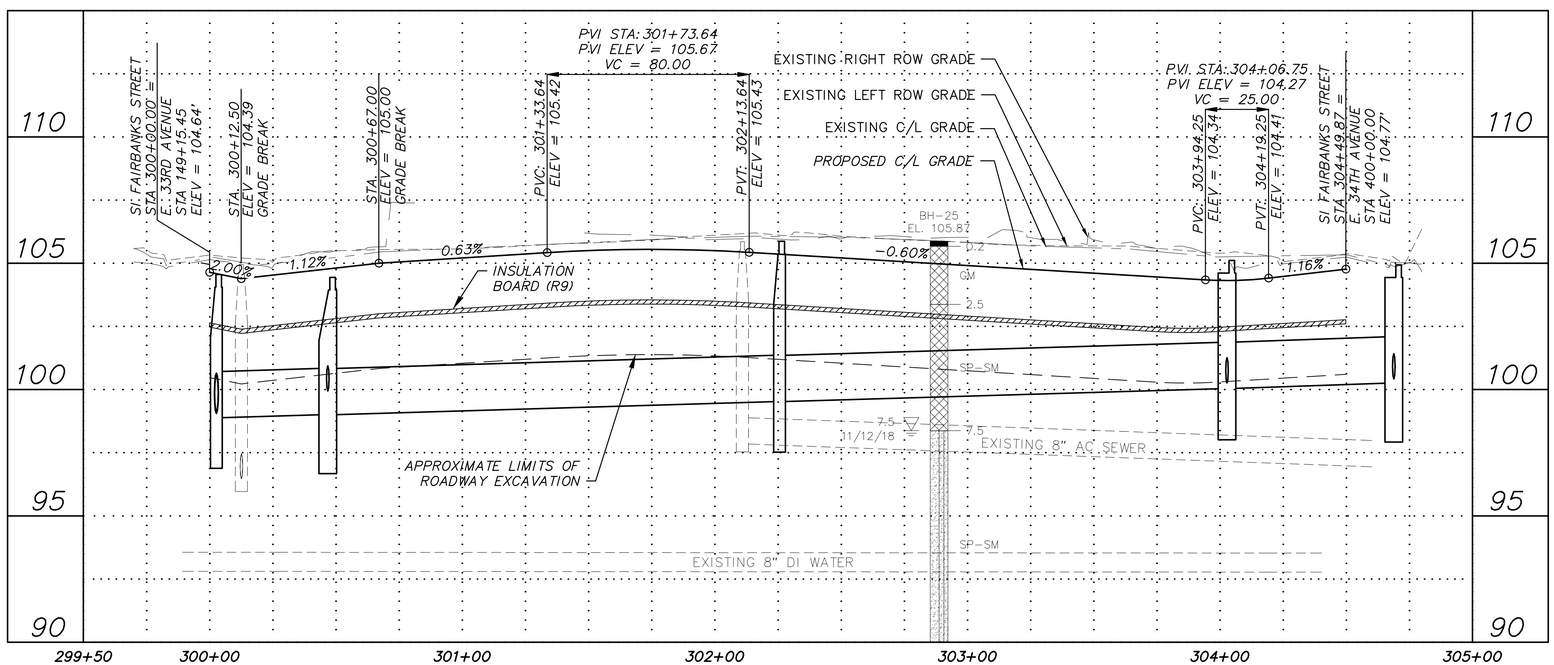


RECORD DRAWING

1. DATA PROVIDED BY: _____ TITLE: _____
   THIS WILL SERVE TO CERTIFY THAT THESE RECORD DRAWINGS ARE A TRUE AND ACCURATE REPRESENTATION OF THE PROJECT AS CONSTRUCTED.
   CONTRACTOR: _____
   BY: _____ TITLE: _____ DATE: _____
2. DATA TRANSFERRED BY: _____ TITLE: _____
   COMPANY: _____ DATE: _____
3. BASED ON PERIODIC FIELD OBSERVATIONS BY THE ENGINEER (OR AN INDIVIDUAL UNDER HIS/HER DIRECT SUPERVISION), THE CONTRACTOR-PROVIDED DATA APPEARS TO REPRESENT THE PROJECT AS CONSTRUCTED.
   DATA TRANSFER CHECKED BY: _____ TITLE: _____
   COMPANY: _____ DATE: _____
   BY: _____

| DATA | DRAWN BY | CHECKED BY |
|---|---|---|
| BASE | TS | MJ |
| TOPOGRAPHY | BW | BW |
| PROFILE | AA | JK |
| STORM SEWER | MV | JH |
| WATER/SANITARY SEWER | CB | JK |
| GAS | CB | JK |
| TELEPHONE | CB | JK |
| ELECTRIC | JH | TK |
| DESIGN | AA | JK |
| QUANTITIES | AA | JK |
| PRELIMINARY/FINAL | AA | JK |
| MUNICIPAL/STATE | AA | JK |

PLAN CHECK

GRAPHIC 60 30 0 30 60 SCALE

| FIELD BOOKS | BM NO. | LOCATION | ELEV. |
|---|---|---|---|
| DESIGN CRW BOOK No. 149, 169, | CB 7D | See MOA Benchmark Book, Page D-56 | 94.77 |
| 195 & 196 | CB 7C | See MOA Benchmark Book, Page D-17 | 106.10 |
| STAKING | GAAB 86 | See MOA Benchmark Book, Page D-18 | 104.53 |
| | | | |
| | | | |
| ASBUILT | | | |
| CONTRACTOR | BASIS OF THIS DATUM GAAB 1972 ADJUST | | |
| INSPECTOR | | | |

CONSTRUCTION RECORD

VERTICAL DATUM

| REV | DATE | DESCRIPTION | BY |
|---|---|---|---|
| | | | |
| | | | |
| | | | |
| | | | |
| | | | |
| | | | |
| | | | |
| | | | |

REVISIONS

CRW ENGINEERING GROUP, LLC
3940 ARCTIC BLVD. SUITE 300
ANCHORAGE, ALASKA 99503
PHONE: (907) 562-3252
@ECLB52-AK

CONSULTANT

STATE OF ALASKA 49TH
Alma O. Abaza
CE-135451
REGISTERED PROFESSIONAL ENGINEER

SEAL

MUNICIPALITY OF ANCHORAGE

PROJECT MANAGEMENT AND ENGINEERING DEPARTMENT

16-29 W. 32ND AVENUE & E. 33RD AVENUE UPGRADES SCHED A
ARCTIC BOULEVARD TO OLD SEWARD HIGHWAY

ROADWAY PLAN AND PROFILE

FAIRBANKS STREET
STA 300+00 TO 304+49.87

SCALE HOR. 1"=30' VER. 1"=3'
GRID SW1629, SW1630, SW1631
DATE JAN 2020
STATUS 65%
SHEET R9 of R37

File: J:\JobsData\10138.00 W 32nd And E 33rd Avenue Upgrade\00 CADD\01 Working Set\01 Civil\01 Design\10138.00 Plan And Profile - Roadway.dwg

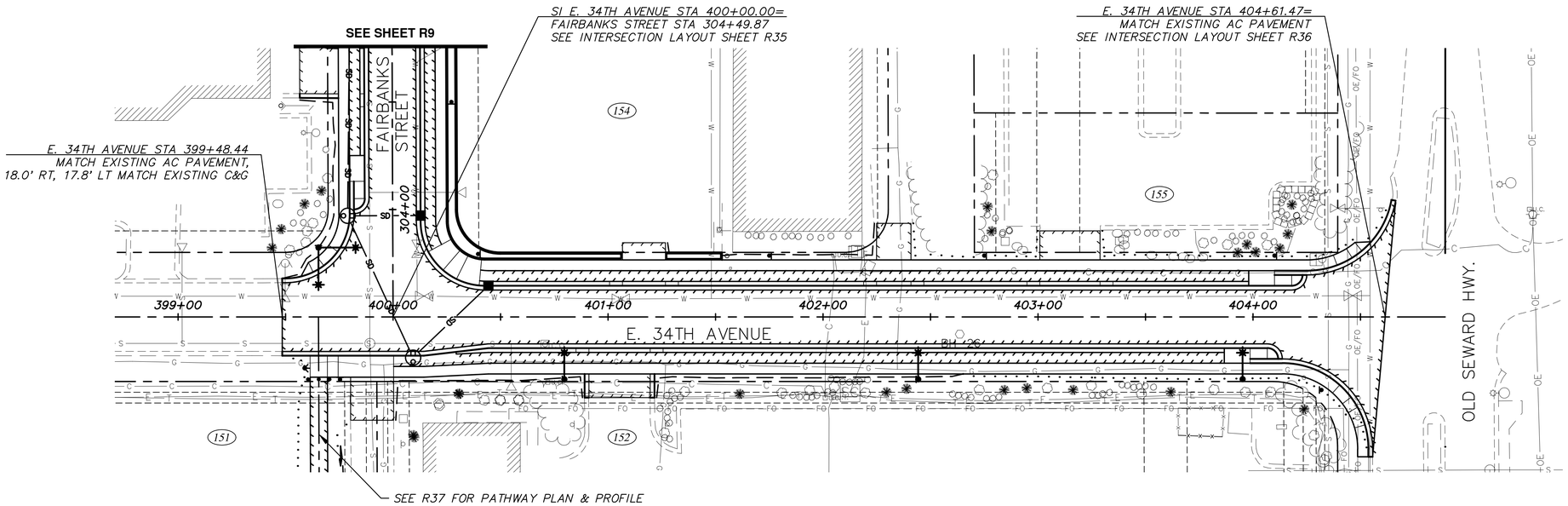


**NOTES:**

1. SEE ROADWAY SUMMARY TABLE (T) SHEETS FOR DETAILED ROADWAY INFORMATION.
2. SEE ROADWAY DETAIL (D) SHEETS FOR ROADWAY DETAILS.
3. FOR DETAILED SOILS INFORMATION, SEE THE SPECIFICATIONS.
4. SEE STORM DRAIN (SD) SHEETS FOR LOCATIONS AND ELEVATIONS OF STORM DRAIN PIPES & STRUCTURES.
5. SEE SURVEY CONTROL (V) SHEETS FOR PROJECT CENTERLINE ALIGNMENT DATA.
6. SEE ILLUMINATION (I) SHEETS FOR ROADWAY LIGHTING INFORMATION.
7. THE DEMOLITION ITEMS REMOVED AS SHOWN ON THE DEMOLITION (B) SHEETS ARE NOT SHOWN FOR CLARITY.

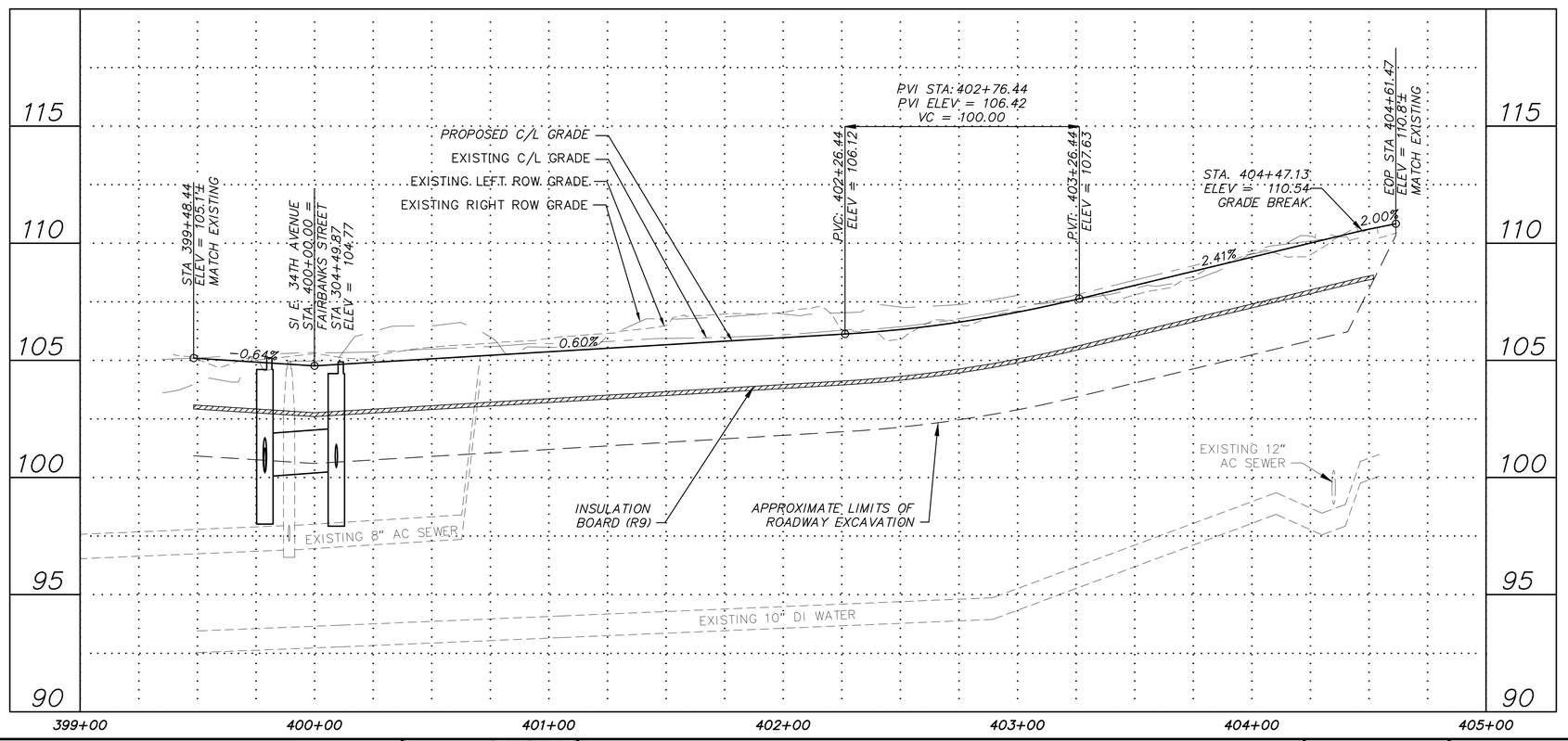


**RECORD DRAWING**

1. DATA PROVIDED BY: _____ TITLE: _____
   THIS WILL SERVE TO CERTIFY THAT THESE RECORD DRAWINGS ARE A TRUE AND ACCURATE REPRESENTATION OF THE PROJECT AS CONSTRUCTED.
   CONTRACTOR: _____
   BY: _____ TITLE: _____ DATE: _____
2. DATA TRANSFERRED BY: _____ TITLE: _____
   COMPANY: _____ DATE: _____
3. BASED ON PERIODIC FIELD OBSERVATIONS BY THE ENGINEER (OR AN INDIVIDUAL UNDER HIS/HER DIRECT SUPERVISION), THE CONTRACTOR-PROVIDED DATA APPEARS TO REPRESENT THE PROJECT AS CONSTRUCTED.
   DATA TRANSFER CHECKED BY: _____ TITLE: _____
   COMPANY: _____ DATE: _____
   BY: _____

| DATA | DRAWN BY | CHECKED BY |
|---|---|---|
| BASE | TS | MJ |
| TOPOGRAPHY | BW | BW |
| PROFILE | AA | JK |
| STORM SEWER | MV | JH |
| WATER/SANITARY SEWER | CB | JK |
| GAS | CB | JK |
| TELEPHONE | CB | JK |
| ELECTRIC | JH | TK |
| DESIGN | AA | JK |
| QUANTITIES | AA | JK |
| PRELIMINARY/FINAL | AA | JK |
| MUNICIPAL/STATE | AA | JK |

PLAN CHECK

GRAPHIC 60 30 0 30 60 SCALE

| FIELD BOOKS | BM NO. | LOCATION | ELEV. |
|---|---|---|---|
| DESIGN CRW BOOK No. 149, 169, | CB 7D | See MOA Benchmark Book, Page D-56 | 94.77 |
| 195 & 196 | CB 7C | See MOA Benchmark Book, Page D-17 | 106.10 |
| STAKING | GAAB 86 | See MOA Benchmark Book, Page D-18 | 104.53 |
| ASBUILT | | | |
| CONTRACTOR | BASIS OF THIS DATUM GAAB 1972 ADJUST | | |
| INSPECTOR | | | |

CONSTRUCTION RECORD

VERTICAL DATUM

| REV | DATE | DESCRIPTION | BY |
|---|---|---|---|
| | | | |

REVISIONS

CRW ENGINEERING GROUP, LLC
3940 ARCTIC BLVD. SUITE 300
ANCHORAGE, ALASKA 99503
PHONE: (907) 562-3252
#AECL882-AK

CONSULTANT

STATE OF ALASKA 49TH
Alma O. Abaza
CE-135451
REGISTERED PROFESSIONAL ENGINEER

SEAL

MUNICIPALITY OF ANCHORAGE

PROJECT MANAGEMENT AND ENGINEERING DEPARTMENT

16-29 W. 32ND AVENUE & E. 33RD AVENUE UPGRADES ARCTIC BOULEVARD TO OLD SEWARD HIGHWAY SCHED A

ROADWAY PLAN AND PROFILE

E. 34TH AVENUE
STA 399+48.44 TO EOP

SCALE HOR. 1"=30' VER. 1"=3'
GRID SW1629, SW1630, SW1631
DATE JAN 2020
STATUS 65%
SHEET R10 of R37

File: J:\JobsData\10138.00 W 32nd And E 33rd Avenue Upgrade\00 CADD\01 Working Set\01 Civil\01 Design\10138.00 Plan And Profile - Roadway.dwg

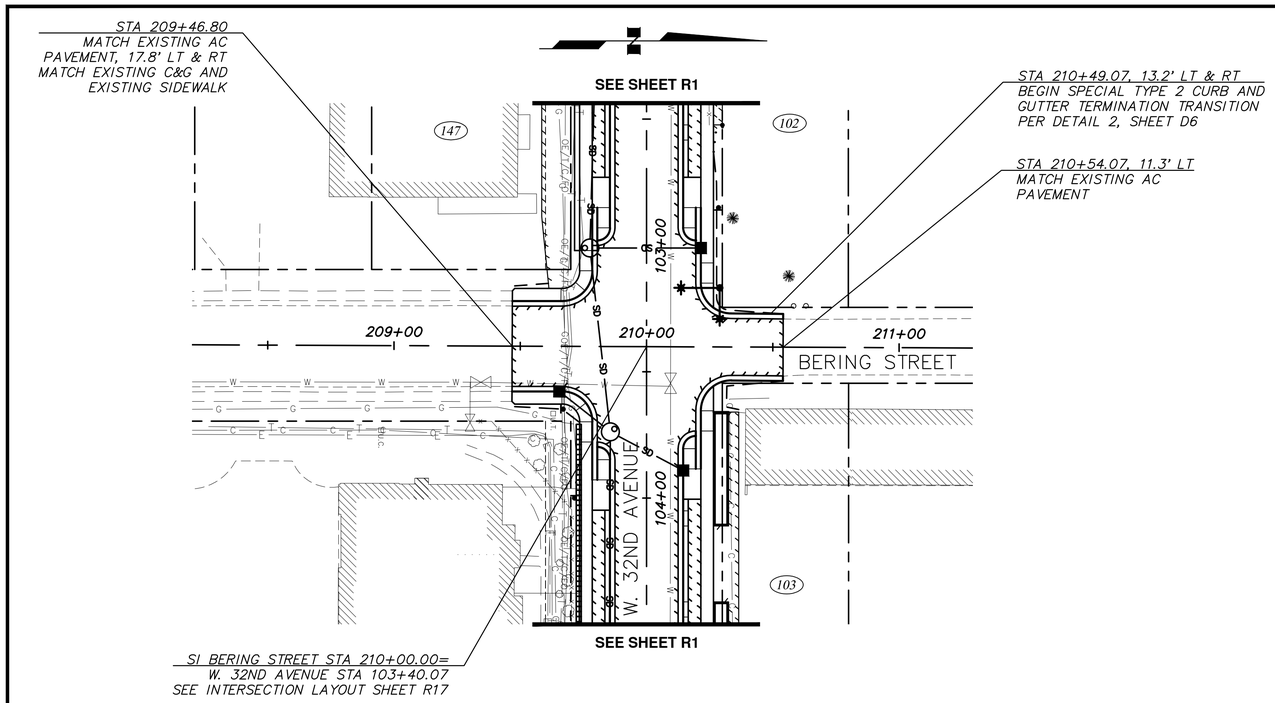


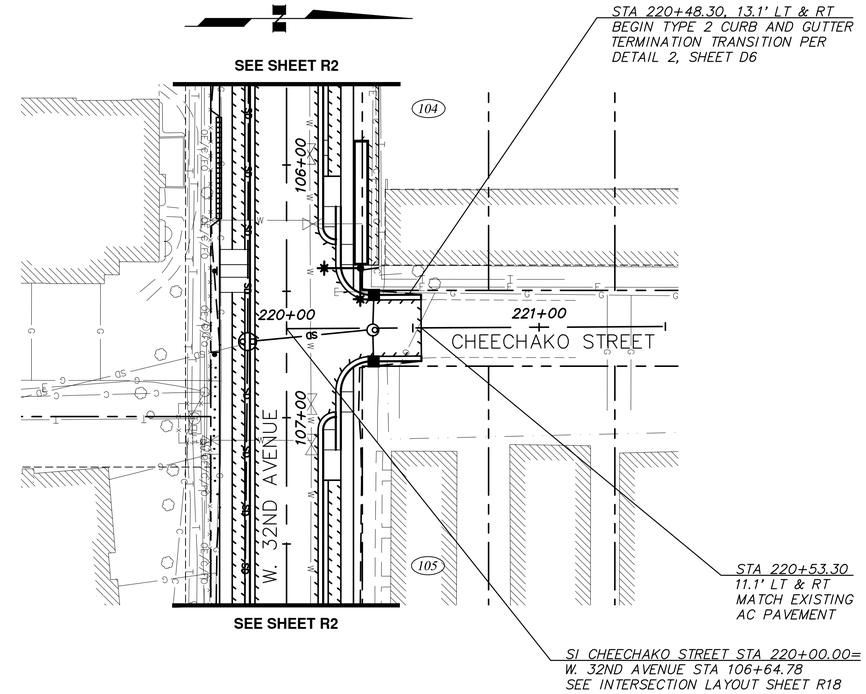


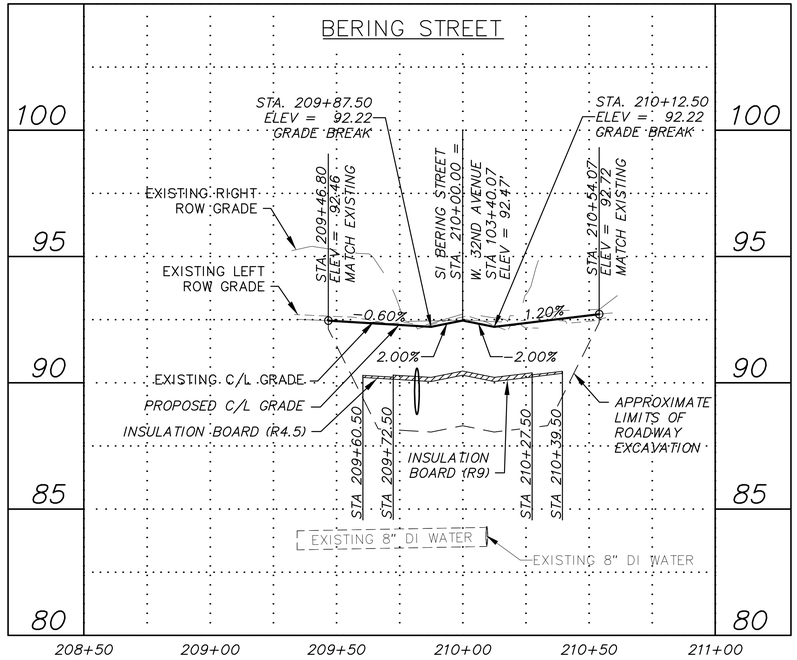


**NOTES:**

1. SEE ROADWAY SUMMARY TABLE (T) SHEETS FOR DETAILED ROADWAY INFORMATION.
2. SEE DETAIL (D) SHEETS FOR ROADWAY DETAILS.
3. FOR DETAILED SOILS INFORMATION, SEE THE SPECIFICATIONS.
4. SEE STORM DRAIN (SD) SHEETS FOR LOCATIONS AND ELEVATIONS OF STORM DRAIN PIPES & STRUCTURES.
5. SEE SURVEY CONTROL (V) SHEETS FOR PROJECT CENTERLINE ALIGNMENT DATA.
6. SEE ILLUMINATION (I) SHEETS FOR ROADWAY LIGHTING INFORMATION.
7. THE DEMOLITION ITEMS REMOVED AS SHOWN ON THE DEMOLITION (B) SHEETS ARE NOT SHOWN FOR CLARITY.

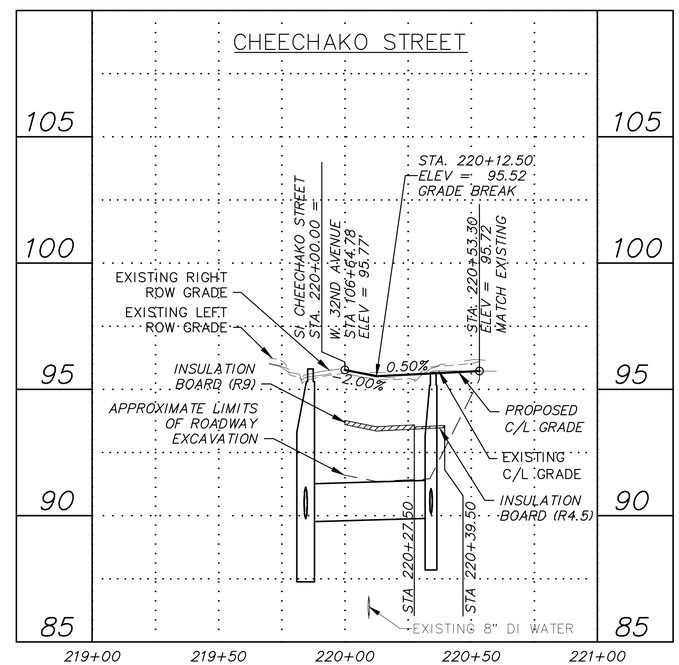


**RECORD DRAWING**

1. DATA PROVIDED BY: _____ TITLE: _____
   THIS WILL SERVE TO CERTIFY THAT THESE RECORD DRAWINGS ARE A TRUE AND ACCURATE REPRESENTATION OF THE PROJECT AS CONSTRUCTED.
   CONTRACTOR: _____
   BY: _____ TITLE: _____ DATE: _____
2. DATA TRANSFERRED BY: _____ TITLE: _____
   COMPANY: _____ DATE: _____
3. BASED ON PERIODIC FIELD OBSERVATIONS BY THE ENGINEER (OR AN INDIVIDUAL UNDER HIS/HER DIRECT SUPERVISION), THE CONTRACTOR-PROVIDED DATA APPEARS TO REPRESENT THE PROJECT AS CONSTRUCTED.
   DATA TRANSFER CHECKED BY: _____ TITLE: _____
   COMPANY: _____ DATE: _____
   BY: _____

| DATA | DRAWN BY | CHECKED BY |
|---|---|---|
| BASE | TS | MJ |
| TOPOGRAPHY | BW | BW |
| PROFILE | AA | JK |
| STORM SEWER | MV | JH |
| WATER/SANITARY SEWER | CB | JK |
| GAS | CB | JK |
| TELEPHONE | CB | JK |
| ELECTRIC | JH | TK |
| DESIGN | AA | JK |
| QUANTITIES | AA | JK |
| PRELIMINARY/FINAL | AA | JK |
| MUNICIPAL/STATE | AA | JK |

PLAN CHECK

GRAPHIC SCALE 60 30 0 30 60

| FIELD BOOKS | BM NO. | LOCATION | ELEV. |
|---|---|---|---|
| DESIGN CRW BOOK No. 149, 169, | CB 7D | See MOA Benchmark Book, Page D-56 | 94.77 |
| 195 & 196 | CB 7C | See MOA Benchmark Book, Page D-17 | 106.10 |
| STAKING | GAAB 86 | See MOA Benchmark Book, Page D-18 | 104.53 |
| ASBUILT | | | |
| CONTRACTOR | BASIS OF THIS DATUM GAAB 1972 ADJUST | | |
| INSPECTOR | | | |

CONSTRUCTION RECORD

VERTICAL DATUM

| REV | DATE | DESCRIPTION | BY |
|---|---|---|---|
| | | | |

REVISIONS

CRW ENGINEERING GROUP, LLC
3940 ARCTIC BLVD. SUITE 300
ANCHORAGE, ALASKA 99503
PHONE: (907) 562-3252
#ECL882-AK

CONSULTANT

STATE OF ALASKA 49 TH
Alma O. Abaza
CE-135451
REGISTERED PROFESSIONAL ENGINEER

SEAL

MUNICIPALITY OF ANCHORAGE

PROJECT MANAGEMENT AND ENGINEERING DEPARTMENT

16-29 W. 32ND AVENUE & E. 33RD AVENUE UPGRADES ARCTIC BOULEVARD TO OLD SEWARD HIGHWAY SCHED A

# ROADWAY PLAN AND PROFILE

BERING STREET & CHEECHAKO STREET

SCALE HOR. 1"=30' VER. 1"=3'
GRID SW1629, SW1630, SW1631
DATE JAN 2020
STATUS 65%
SHEET R11 of R37

File: J:\JobsData\10138.00 W 32nd And E 33rd Avenue Upgrade\00 CADD\01 Working Set\01 Civil\01 Design\10138.00 Plan And Profile - Sidestreets.dwg

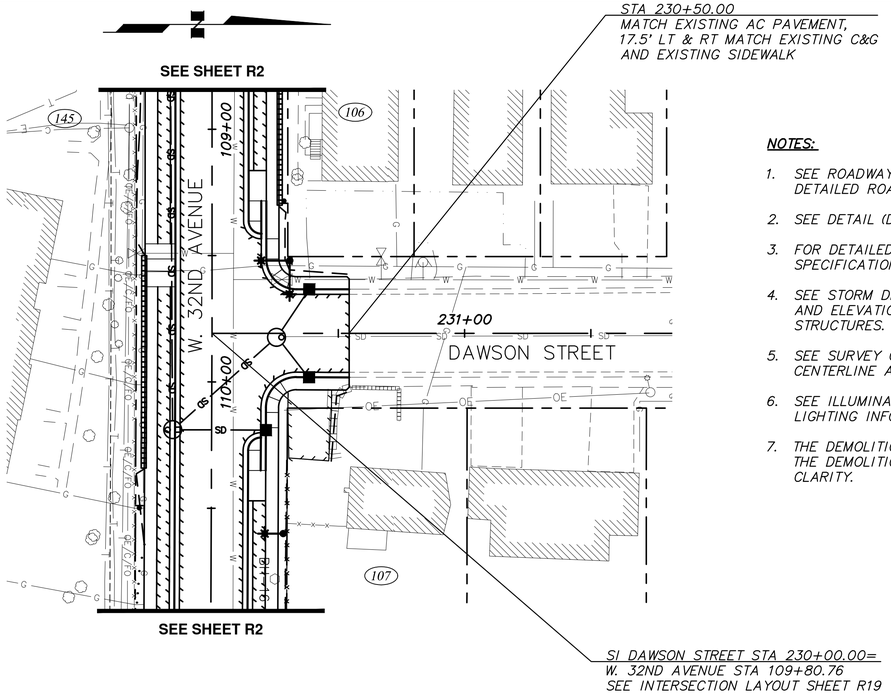


**NOTES:**

1. SEE ROADWAY SUMMARY TABLE (T) SHEETS FOR DETAILED ROADWAY INFORMATION.
2. SEE DETAIL (D) SHEETS FOR ROADWAY DETAILS.
3. FOR DETAILED SOILS INFORMATION, SEE THE SPECIFICATIONS.
4. SEE STORM DRAIN (SD) SHEETS FOR LOCATIONS AND ELEVATIONS OF STORM DRAIN PIPES & STRUCTURES.
5. SEE SURVEY CONTROL (V) SHEETS FOR PROJECT CENTERLINE ALIGNMENT DATA.
6. SEE ILLUMINATION (I) SHEETS FOR ROADWAY LIGHTING INFORMATION.
7. THE DEMOLITION ITEMS REMOVED AS SHOWN ON THE DEMOLITION (B) SHEETS ARE NOT SHOWN FOR CLARITY.

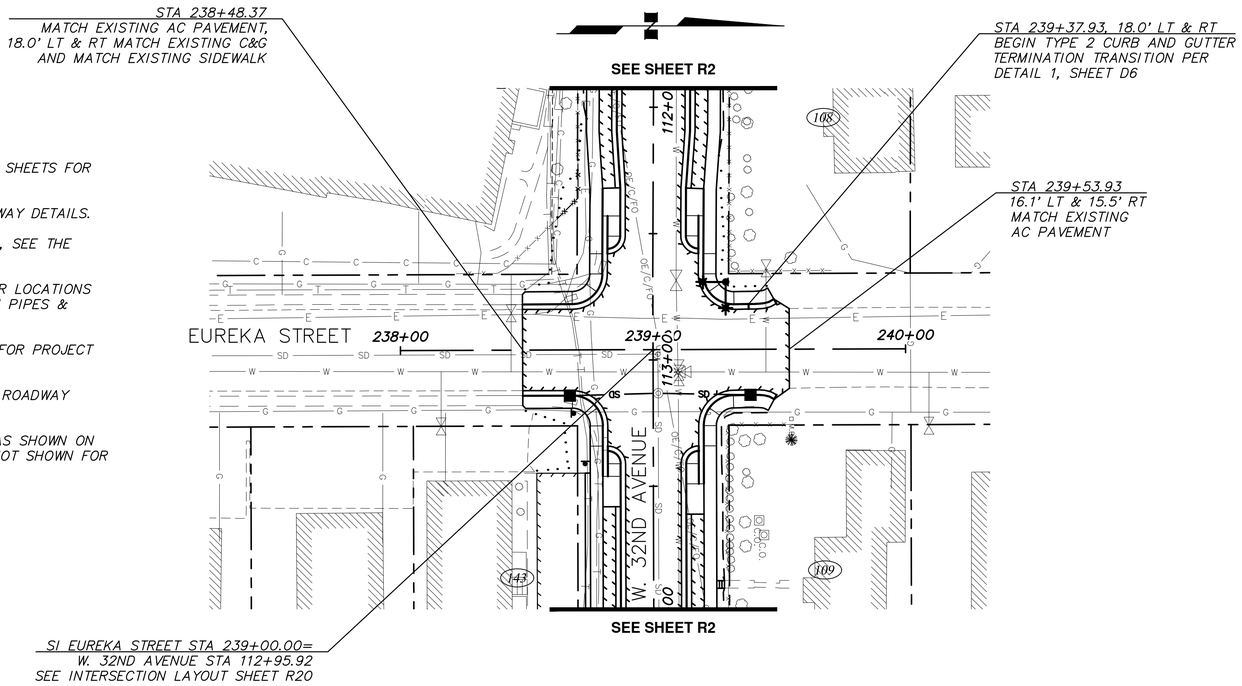


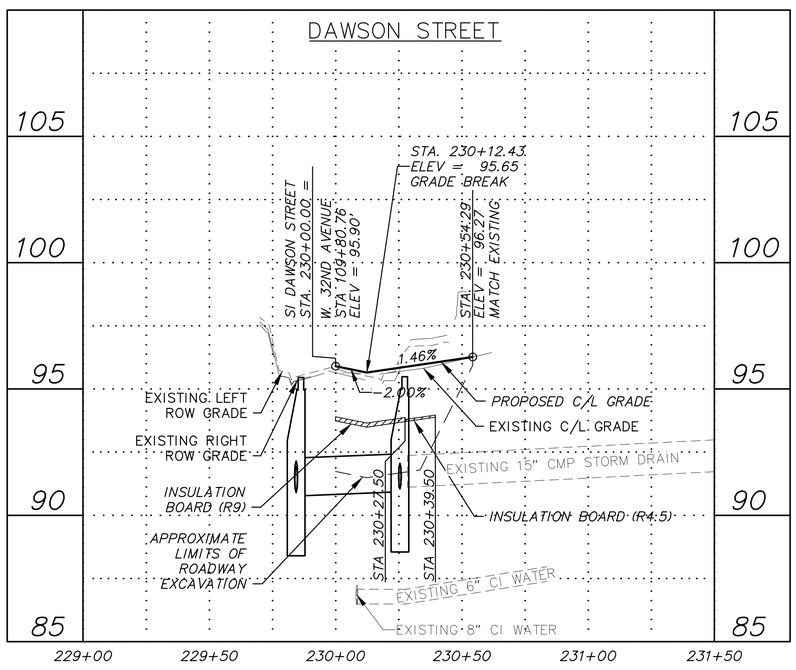


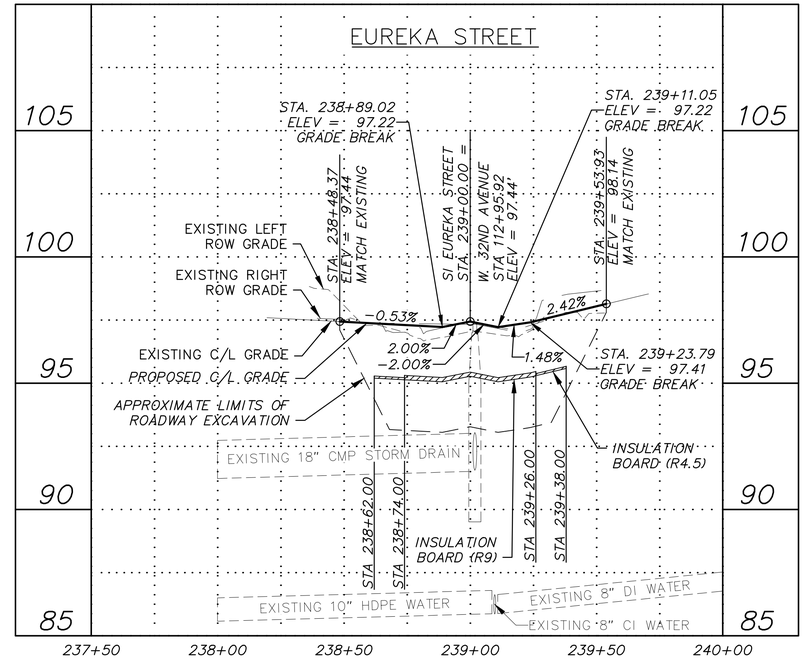


**RECORD DRAWING**

1. DATA PROVIDED BY: _____ TITLE: _____

   THIS WILL SERVE TO CERTIFY THAT THESE RECORD DRAWINGS ARE A TRUE AND ACCURATE REPRESENTATION OF THE PROJECT AS CONSTRUCTED.

   CONTRACTOR: _____

   BY: _____ TITLE: _____ DATE: _____
2. DATA TRANSFERRED BY: _____ TITLE: _____

   COMPANY: _____ DATE: _____
3. BASED ON PERIODIC FIELD OBSERVATIONS BY THE ENGINEER (OR AN INDIVIDUAL UNDER HIS/HER DIRECT SUPERVISION), THE CONTRACTOR-PROVIDED DATA APPEARS TO REPRESENT THE PROJECT AS CONSTRUCTED.

   DATA TRANSFER CHECKED BY: _____ TITLE: _____

   COMPANY: _____ DATE: _____

   BY: _____

| DATA | DRAWN BY | CHECKED BY |
|---|---|---|
| BASE | TS | MJ |
| TOPOGRAPHY | BW | BW |
| PROFILE | AA | JK |
| STORM SEWER | MV | JH |
| WATER/SANITARY SEWER | CB | JK |
| GAS | CB | JK |
| TELEPHONE | CB | JK |
| ELECTRIC | JH | TK |
| DESIGN | AA | JK |
| QUANTITIES | AA | JK |
| PRELIMINARY/FINAL | AA | JK |
| MUNICIPAL/STATE | AA | JK |

PLAN CHECK

GRAPHIC 60 30 0 30 60 SCALE

| FIELD BOOKS | BM NO. | LOCATION | ELEV. |
|---|---|---|---|
| DESIGN CRW BOOK No. 149, 169, | CB 7D | See MOA Benchmark Book, Page D-56 | 94.77 |
| 195 & 196 | CB 7C | See MOA Benchmark Book, Page D-17 | 106.10 |
| STAKING | GAAB 86 | See MOA Benchmark Book, Page D-18 | 104.53 |
| | | | |
| | | | |
| | | | |
| ASBUILT | | | |
| CONTRACTOR | BASIS OF THIS DATUM GAAB 1972 ADJUST | | |
| INSPECTOR | | | |

CONSTRUCTION RECORD — VERTICAL DATUM

| REV | DATE | DESCRIPTION | BY |
|---|---|---|---|
| | | | |
| | | | |
| | | | |
| | | | |
| | | | |
| | | | |
| | | | |
| | | | |

REVISIONS

CRW ENGINEERING GROUP, LLC
3940 ARCTIC BLVD. SUITE 300
ANCHORAGE, ALASKA 99503
PHONE: (907) 562-3252
#AECL882-AK

CONSULTANT

STATE OF ALASKA 49TH
Alma O. Abaza
CE-135451
REGISTERED PROFESSIONAL ENGINEER

SEAL

MUNICIPALITY OF ANCHORAGE

PROJECT MANAGEMENT AND ENGINEERING DEPARTMENT

16-29 W. 32ND AVENUE & E. 33RD AVENUE UPGRADES ARCTIC BOULEVARD TO OLD SEWARD HIGHWAY SCHED A

# ROADWAY PLAN AND PROFILE

DAWSON STREET & EUREKA STREET

SCALE HOR. 1"=30' VER. 1"=3'

GRID SW1629, SW1630, SW1631

DATE JAN 2020 STATUS 65%

SHEET R12 of R37

File: J:\JobsData\10138.00 W 32nd And E 33rd Avenue Upgrade\00 CADD\01 Working Set\01 Civil\01 Design\10138.00 Plan And Profile - Sidestreets.dwg